Letové prevádzkové služby Slovenskej republiky, štátny podnik
LPS SR Air Navigation Services Provider
www.lps.sk

Consolidated (2) Specification for procurement of the delivery, installation and introduction of the equipment / system into operations

Upgrade of the Backup Radio Communication System

NOTICE:
This document is owned by LPS SR, š. p. and shall not be used for any other purpose than for preparing the bid. No part of this document may be reproduced, stored in a retrieval system, or transmitted, in any form or by any means, electronic, mechanical, photocopying, recording or otherwise, without their prior permission.

Table of contents

1. INTRODUCTION 6

1.1. PURPOSE OF THIS DOCUMENT 6
1.2. SCOPE 6
1.3. OFFER PROCESSING 7
1.4. REFERENCE DOCUMENTS 7
1.4.1. Applicable documents 7
1.4.2. Regulatory Documents 8
1.5. TERMINOLOGY 9
1.6. CONSIDERATIONS ON THE REQUIRED A/G COMMUNICATIONS FOR ATCC 10
1.7. GENERAL 11
1.8. RADIO SITES 12
1.9. QUANTITY OF EQUIPMENT 14
1.10. SITE SURVEY 15

2. EQUIPMENT SPECIFICATION 16

2.1. GENERAL REQUIREMENTS 16
2.2. VOICE OVER INTERNET PROTOCOL (VOIP) 16
2.2.2. Environment Conditions 16
2.2.3. Construction and Design 16
2.2.4. Radio Data Interface 17
2.2.5. Safety Precautions 17
2.3. VHF AND UHF TRANSMITTER REQUIREMENTS 18
2.3.1. Construction and Design 18
2.3.2. Electrical Characteristics 18
2.3.3. Radiation Characteristics 19
2.3.4. Tuning 19
2.3.5. Push-To-Talk 20
2.3.6. Analogue Interfaces 20
2.3.7. External Interfaces: 20
2.3.8. RF Interfaces 20
2.3.9. Power Supply 20
2.3.10. Local Control and Monitoring 21
2.3.11. Remote Control and Monitoring 21
2.4. VHF AND UHF RECEIVER REQUIREMENTS 22
2.4.1. Construction and Design 22
2.4.2. Electrical Characteristics 22
2.4.3. Overall Selectivity 23
2.4.4. Audio Output 24
2.4.5. Squelch indication interfaces 25
2.4.6. RF Interface 25
2.4.7. Radiation Characteristics 25
2.4.8. Power Supply 25
2.4.9. Receiver Control and Monitoring 25
2.4.10. Remote Control 26
2.5. VHF AND UHF TRANSCEIVER REQUIREMENTS 26
2.6. RX MULTICOUPLER SPECIFICATION 27
2.6.1. Construction and Design 27
2.6.2. Electrical Characteristics 27
2.6.3. Power Supply 27
2.7. VHF AND UHF CIRCULATOR 28
2.7.1. Construction and Electrical Characteristics 28
2.7.2. VHF Circulator 28
2.7.3. UHF Circulator 28
2.8. FILTER SPECIFICATION 28
2.8.1. Construction and Electrical Characteristics 28
2.8.2. VHF Band-Pass filter type 1 29

2.8.3. VHF Band-Pass filter type 2 ..... *29*
2.8.4. UHF Band-Pass filter type 1 ..... *29*
2.8.5. UHF Band-Pass filter type 2 ..... *29*
2.8.6. VHF Stop-Pass filter *29*
2.9. RF POWER METER 30
2.10. ANTENNA SPECIFICATION 30
2.11. RF SWITCH 31
2.12. RF LINES SPECIFICATION 31
2.12.2. Ring-shaped Coaxial Cable *31*
2.12.3. Flexible Coaxial Cable 1 ..... *31*
2.12.4. Flexible Coaxial Cable 2 ..... *32*
2.12.5. Lightning Protector Specification *32*
2.12.6. Grounding Kit Specification *32*
2.12.7. Installation of RF Line *33*
2.13. CABINET SPECIFICATION 33
2.13.1. General requirement for Cabinets *33*
2.13.2. The Power Supply for TX/RX/TRX Cabinets *34*
2.13.3. Cabinets for ATCC *34*
2.13.4. Cabinets for Poprad-Tatry *35*
2.13.5. Cabinet for Košice *35*

3. SYSTEM CONFIGURATION 36

3.1. GENERAL REQUIREMENTS 36
3.2. ATCC RADIO SYSTEM 37
3.3. BACKUP RADIO SYSTEM FOR THE AIRPORT POPRAD-TATRY 43
3.4. KOŠICE RADIO SYSTEM 47

4. REMOTE CONTROL AND MONITORING SYSTEM 52

4.1. RCMS TOPOLOGY 52
4.2. RCMS LICENSE 53
4.3. SITE-RCMS SYSTEM 53
4.4. CENTRAL-RCMS SYSTEM 54
4.5. HARDWARE SPECIFICATION 55
4.5.1. Central RCMS Server *55*
4.5.2. Site RCMS Work Station *55*
4.5.3. Supervisor RCMS Computer *55*
4.5.4. Laptop *56*
4.5.5. Central Display *56*
4.5.6. IP Extender and KVM Switch *57*
4.5.7. Sensors *57*
4.5.8. IO Extender *58*
4.6. RCMS SOFTWARE APPLICATION 58
4.6.1. General Requirements *58*
4.6.2. HMI *59*
4.6.3. User Access Levels *61*
4.6.4. Radio Data Presentation *62*
4.6.5. RCMS Output to CMS *63*

5. CYBERSECURITY REQUIREMENTS 66

5.1. GENERAL REQUIREMENTS 66
5.2. VHF AND UHF TRANSMITTER AND RECEIVER REQUIREMENTS 66
5.3. HARDENING 67
5.4. LOGGING 67
5.5. APPLICATION REQUIREMENTS 68
5.5.1. Application login process *68*
5.5.2. Application user passwords *68*
5.5.3. Logging *68*
5.5.4. Application network profile *69*

5.6. REQUIREMENTS FOR THE OPERATION IN THE LPS SR ENVIRONMENT 69

6. SUPPORT 71

6.1. SERVICE LEVEL AGREEMENT 71
6.2. REMOTE REPAIR 71
6.3. MANDATORY SPARE PARTS SET 71
6.4. ADDITIONAL SPARE PARTS 72
6.5. WARRANTY AND POST WARRANTY SERVICE 73

7. TECHNICAL SYSTEM DOCUMENTATION 74

7.1. PROJECT DOCUMENTATION 74
7.2. DOCUMENTATION OF LEGAL REQUIREMENTS OF THE EUROPEAN UNION 75
7.2.1. Interoperability 75
7.2.2. Safety Assurance 77
7.3. RAM (RELIABILITY, AVAILABILITY, MAINTAINABILITY) 78
7.3.1. General 78
7.3.2. Reliability 78
7.3.3. Maintainability 79
7.3.4. Availability 79

8. TRAINING 80

9. PROJECT MANAGEMENT 82

9.1. GENERAL 82
9.2. PROJECT MANAGEMENT PLAN 83
9.3. LOGISTIC PLAN 83
9.4. DOCUMENTATION PLAN 83
9.5. INSTALLATION AND MIGRATION PLAN 84
9.6. ACCEPTANCE TEST PLANS AND PROCEDURES 84
9.7. CONTRACTOR REQUIREMENTS FOR POWER SUPPLY 85

10. INSTALLATION AND MIGRATION 86

10.1. INSTALLATION 86
10.2. MIGRATION ON NEW SYSTEM 86

11. TESTING AND ACCEPTANCE 87

11.1. FACTORY ACCEPTANCE TESTING 87
11.2. SITE ACCEPTANCE TESTING 88
11.3. FINAL PRE-OPERATIONAL VERIFICATION 89
11.4. FINAL PRE-OPERATIONAL ACCEPTANCE FOR THE ENTIRE SYSTEM 90
11.5. FINAL ACCEPTANCE AFTER WARRANTY PERIOD EXPIRATION 90

12. ABBREVIATIONS 91

Table of Figures

Figure 1 – ATCC site location 12
Figure 2 – ATCC transmitters antenna location 12
Figure 3 – Poprad-Tatry antenna location 13
Figure 4 – Košice antenna location 13
Figure 5 – ATCC antenna location 37
Figure 6 – ATCC radio channel connection 38
Figure 7 – ATCC receiver site RF scheme 39
Figure 8 – ATCC transmitter RF scheme 40
Figure 9 – ATCC transmitter and filter cabinets 41
Figure 10 – ATCC receiver and filter cabinets 42
Figure 11 – Poprad-Tatry antenna location 43
Figure 12 – Poprad-Tatry radio channel connection 44
Figure 13 – Poprad-Tatry receiver RF scheme 45
Figure 14 – Poprad-Tatry transmitter RF scheme 45
Figure 15 – Poprad-Tatry cabinets 47
Figure 16 – Košice antenna location 48
Figure 17 – Košice radio channel connection 49
Figure 18 – Košice receiver RF scheme 49
Figure 19 – Košice transmitter RF scheme 50
Figure 20 – Košice TRX cabinet 51
Figure 21 – RCMS topology 52
Figure 22 –Level 1 screen 60
Figure 23 – Statuses 1 of frequency objects 60
Figure 24 – Statuses 2 of frequency objects 60
Figure 25 – Statuses cabinet and RF Power Meters 60
Figure 26 – Testing platform 87

1. Introduction

LPS SR, š.p. (hereinafter referred to as "LPS") plans to replace the existing VHF and UHF radio equipment for backup radio sites at Area Traffic Control Centre (ATCC) in Bratislava and at the airports Poprad-Tatry and Košice. ATCC backup radio site is dedicated for en-route communication in FIR of the Slovak Republic. Backup radio sites at the airports Poprad-Tatry and Košice are dedicated for Tower and Approach communication.

The replace of existing VHF equipment is intended for:

- better reliability – the existing equipment is at the end of the life cycle,
- necessity for 8.33 kHz channel separation and
- future smooth and easy migration to VoIP technology.

1.1. *Purpose of this document*

This document specifies requirements for supply, installation, training, documentation, technical support, warranty terms and conditions, for implementation and commissioning of the Upgrade of the Backup Radio Communication System of LPS.

1.2. *Scope*

The upgrading process will be divided into the following phases (the order of the sites can be changed during project):

1) System and equipment training for administrators of the system.
2) Factory acceptance test.
3) System and equipment training for technicians.
4) Installation at ATCC radio sites:
   - Replacement of the existing VHF and UHF backup radio system on the transmitter and receiver stations at the ATCC. The number of radio devices to be installed at the RX and TX stations is defined in the chapter 4 Radio sites configuration.
   - Installation of the Site-RCMS system at ATCC site.
   - Installation of the Central-RCMS system at Operational Building in Bratislava.
5) Site Acceptance Test for ATCC backup radio system.
6) Site Acceptance Test for the Central-RCMS system.
7) Final Pre-operational Verification for ATCC backup radio system in period of 2 months.
8) Installation at the airport Poprad Tatry:
   - Replacement of the existing VHF backup radio system at the airport Poprad Tatry.
   - Installation of the Site-RCMS system and integration of the equipment into Site and Central RCMS system.
9) Site Acceptance Test for Poprad Tatry backup radio system.
10) Final Pre-operational Verification for Poprad Tatry in period of 2 months.
11) Installation at the airport Košice:
   - Replacement of the existing VHF backup radio system at the airport Košice.
   - Installation of the Site-RCMS system and integration of the equipment into Site and Central RCMS system.
12) Site Acceptance Test for Košice backup radio system.
13) Final Pre-operational Verification for Košice in period of 2 months.
14) Final Pre-operational Acceptance FPA for the entire system.
15) Final Acceptance after warranty period expiration.
16) Repeated trainings for administrators since 2, 4 and 6 years from FAT

1.3. *Offer processing*

TS_1.3_1 The submitted tender together with all submitted technical documentation shall follow the structure of this Specification in adequate sections and shall be binding.

TS_1.3_2 The Contractor shall prepare a Compliance Matrix Shall which will demonstrate compliance with each requirement. The Contractor shall provide paragraph-by-paragraph compliance statements according to references to individual sections and paragraphs of this document to declare whether the Contractor is able to meet the Technical Specifications. The offered system shall have at least the same or better technical characteristics as requested in this tender.

TS_1.3_3 The Contractor shall also provide additional remarks if they are considered helpful for assessing the response (column Remarks in the Compliance Matrix Shall). Each remark shall be uniquely refer to the corresponding document (Chapter, Paragraph).

TS_1.3_4 The Contractor compliance status shall be indicated in the 'Compliance' column with a "Y" for Compliance or "N" for Non-Compliance. No other response shall be accepted during evaluation and absence of a Y or N shall be considered as Non-Compliant.

TS_1.3_5 The Contractor shall provide a proof/explanation of every indicated "Y" - Compliance in the 'Compliance' column. Additionally, where the answer can be found in the submitted documentation, the Contractor shall provide a reference and point out to the specific line/paragraph/chapter/document where the compliance status may be verified.

TS_1.3_6 Every non-substantiated requirement marked with "Y" by the Tenderer shall be declared as Non-Compliant in the offer evaluation by LPS.

1.4. *Reference Documents*

Wherever any reference is made in this Technical Specification to specific regulations, standards and codes, provisions of the latest valid edition or review of relevant regulations, standards or codes in effect shall apply, unless otherwise expressly stated in the Technical Specifications.

1.4.1. Applicable documents

TS_1.4.1_1 All supplied equipment shall work in full conformity with the following documents:

- ICAO Annex 10, Vol. II, (latest edition)
- ICAO Annex 10, Vol. III, (latest edition)
- ICAO Annex 10, Vol. V, (latest edition)
- ICAO EUR Doc 011, EUR Frequency Management Manual
- ICAO Doc 9718, Handbook on Radio Frequency Spectrum Requirements for Civil Aviation
- EUROCAE ED136 Voice over Internet Protocol (VoIP) Air Traffic Management (ATM) System Operational and Technical Requires
- EUROCAE ED137/C Interoperability Standard for VOIP ATM Components (edition C, April 2017)
- EUROCAE ED138 Network Requirements and Performances for VoIP ATM Systems (February 2009)
- EUROCAE ED153 Guidelines for ANS Software Safety Assurance
- ISO/IEC 27002 Information technology -- Security techniques -- Code of practice for information security controls

- ETSI EN 300 676-01 and ETSI EN 300 676-02 (latest official edition) Ground-based VHF hand-held, mobile and fixed radio transmitters, receivers and transceivers for the VHF aeronautical mobile service using amplitude modulation
- ETSI EN 301 489-22 (latest official edition), EMC standard for radio equipment and services; Specific conditions for ground-based VHF aeronautical mobile and fixed radio equipment
- ETSI EN 302 617 (latest official edition), Electromagnetic compatibility and Radio spectrum Matters for the UHF aeronautical mobile service using amplitude modulation
- RFC1305 - Network Time Protocol (Version 3) Specification

TS_1.4.1_2 The equipment shall also meet the following standards for electrical safety:

- IEC 62368-1 - Audio/video, information and communication technology equipment
- ETSI 300676 - Radio Equipment and System (RES); Radio transmitters and receivers at aeronautical stations of the aeronautical mobile service operating in the VHF band (118 MHz - 137 MHz) using amplitude modulation and 8,33 kHz channel spacing
- ETSI 302617 Ground-based UHF radio transmitters, receivers and transceivers for the UHF aeronautical mobile service using amplitude modulation

TS_1.4.1_3 The radio equipment shall be newly-produced and shall meet the requirements for ground-based aeronautical stations laid down in standard documents listed in TS_1.4.1_1.

1.4.2. Regulatory Documents

TS_1.4.2_1 The offered concept, design and equipment shall be fully compliant with:

- Commission Implementing regulation (EU) No 1079/2012 laying down requirements for voice channels spacing for the single European sky, as amended by the Commission Implementing Regulation (EU) 2017/2160 of 20 November 2017 amending Implementing Regulation (EU) No 1079/2012 as regards certain references to ICAO provisions.

- Directive 2014/30/EU of the European Parliament and of the Council of 26 February 2014 on the harmonization of the laws of the Member States relating to electromagnetic compatibility, laying down requirements on the Electromagnetic Compatibility (EMC), as amended by the Regulation (EU) 2018/1139 of the European Parliament and of the Council of 4 July 2018 on common rules in the field of civil aviation and establishing a European Union Aviation Safety Agency, as amended by the Commission Delegated Regulation(EU) 2021/1087 of the European Parliament and of the Council of 7 April 2021 as regards updating the references to the provisions of the Chicago Convention.

- Directive 2014/35/EU of the European Parliament and of the Council of 26 February 2014 on the harmonization of the laws of the Member States relating to the making available on the market of electrical equipment designed for use within certain voltage limits (low voltage directive – LVD).

- Directive 2014/53/EU on the harmonization of the laws of the Member States relating to the making available on the market of radio equipment (RTT), as amended by the Regulation (EU) 2018/1139 of the European Parliament and of the Council of 4 July 2018 on common rules in the field of civil aviation and establishing a European Union Aviation Safety Agency, as amended by the Commission Delegated Regulation(EU) 2021/1087 of the European Parliament and of the Council of 7 April 2021 as regards updating the references to the provisions of the Chicago Convention.

- The Law No. 143/1998 on Civil Aviation (Aviation Act) and on amendments to certain Acts of the Slovak Republic

- Commission Implementing Regulation (EU) 2017/373 of 1 March 2017 laying down common requirements for providers of air traffic management/air navigation services and other air traffic management network functions and their oversight, repealing Regulation (EC) No 482/2008, Implementing Regulations (EU) No 1034/2011, (EU) No 1035/2011 and (EU) 2016/1377 and amending Regulation (EU) No 677/2011

- Regulation (EU) 2018/1139 of the European Parliament and of the Council of 4 July 2018 on common rules in the field of civil aviation and establishing a European Union Aviation Safety Agency, and amending Regulations (EC) No 2111/2005, (EC) No 1008/2008, (EU) No 996/2010, (EU) No 376/2014 and Directives 2014/30/EU and 2014/53/EU of the European Parliament and of the Council, and repealing Regulations (EC) No 552/2004 and (EC) No 216/2008 of the European Parliament and of the Council and Council Regulation (EEC) No 3922/91, as amended by the Commission Delegated Regulation (EU) 2021/1087 of 7 April 2021 amending Regulation (EU) 2018/1139 of the European Parliament and of the Council, as regards updating the references to the provisions of the Chicago Convention

- Commission Delegated Regulation (EU) 2023/1768 of 14 July 2023 laying down detailed rules for the certification and declaration of air traffic management/air navigation services systems and air traffic management/air navigation services constituents

- Commission Implementing Regulation (EU) 2023/1769 of 12 September 2023 laying down technical requirements and administrative procedures for the approval of organizations involved in the design or production of air traffic management/air navigation services systems and constituents and amending Implementing Regulation (EU) 2023/203

1.5. *Terminology*

In this document the following standard terminology is used:

Term	Definition
LPS SR, š. p.	Letové prevádzkové služby Slovenskej republiky, štátny podnik, Slovak ANSP, the "Contracting Entity" during the public procurement, the "Employer" after the Contract has been signed

Tender	An offer which the Tenderer prepares according to the Tender Documentation and submits to the Contracting Entity
Tenderer	A company which offers to deliver services and/or supplies for remuneration (potential contractor)
Tender Documentation	A written invitation to potential suppliers of goods or services that contains all information necessary to enable suppliers to prepare and submit responsive Tenders
Contractor	A company which provides services and/or supplies based on a contract
Site Survey	Inspection of an area where goods shall be delivered and service provided with the aim to gather information necessary for designing equipment and estimating the works and time needed to accomplish a particular activity. Site Survey shall be performed after the Contract has been signed.
Option	Equipment/ systems and services which not will be a part of delivery but it/they can be purchased under an amendment of the Contract during the validity of the Contract
Shall	Indicating a mandatory requirement to be fulfilled by the Contractor, unless stated otherwise
Will	Indicating an intended mode of operation / Expected action
Availability	A measure of the extent to which an item is in an operable state at any time
Reliability	Probability that an item will perform its intended function for a specified interval under the stated conditions
Maintainability	A measure of the ability of an item to be retained in, or restored to, a specified condition when maintenance is performed using prescribed procedures and technical skill levels.
Contract Effectiveness	If any part of the present Technical Specification refers to the Contract signature date and the Contract effectiveness date, it is always the Contract effectiveness date, i.e. the date following after the Contract was disclosed in the Central Register of Contracts.

1.6. *Considerations on the required A/G communications for ATCC*

VHF and UHF frequencies will be used for provision of voice radiotelephony communication between aircraft and an ATC center in Bratislava and Control Tower in Poprad-Tatry and Košice. The VHF and UHF frequencies to be used are indicated in tables in the chapter 3 - Radio sites configuration.

Three levels of redundancy for ATCC frequencies are currently used and required:

- 1st level is doubled radio equipment at the radio site for operational frequencies
- 2nd level is a number of three independent radio sites for each frequency
- 3rd level is a Backup Radio System installed in the ATC centre

Two levels of redundancy for airport frequencies are currently used and required:

- 1st level is doubled radio equipment at the radio site for operational frequencies
- 2nd level is a Backup Radio System installed on the airport

1.7. *General*

TS_1.7_1 The Contractor is solely responsible for the System design. If any changes to the design are necessary to meet the Specifications, the Contractor shall carry out such changes at no cost to the LPS.

TS_1.7_2 The Contractor shall be responsible for system engineering efforts associated with the design, production, installation, testing and audit of the systems and equipment being provided.

TS_1.7_3 The Contractor shall deliver a detailed rack layout and equipment placement scheme for every location from which the placement of all equipment (transmitters, receivers, multicouplers, remote control system…) shall be clearly visible inside the object and each telecommunication cabinet.

TS_1.7_4 The Contractor shall design a radio system according to the specified system described in this document and in its attachment diagrams.

TS_1.7_5 The Contractor shall deliver detailed schematic diagrams for RCMS layout interconnection from which a general and detailed design of the RCMS system shall be clearly visible.

TS_1.7_6 The Contractor shall deliver detailed schematic diagrams for radio and antenna system interconnection from which a general and detailed design of the radio system shall be clearly visible for every radio site independently.

1.8. *Radio Sites*

TS_1.8_1 The upgrade of Backup Radio Communication Systems shall be made for ATC Centre, Airport Poprad-Tatry and Airport Košice.

Backup radio site for **ATCC** consists of transmitter radio site located directly at ATCC operational building and receiver radio site located at JSRLP building. Distance between TX and RX site is approximately 460 m. JSRLP building is located inside the Štefánik Airport area – see picture below:



Figure 1 – ATCC site location



Figure 2 – ATCC transmitters antenna location

Backup radio site for the **Airport Poprad-Tatry** is located directly at operation building below the Control Tower. Transmitters and receivers will use separate antennas for RX and TX with the distance approximately 20m between antennas. New RX antennas need to be installed with new antennas and coaxial feeders.

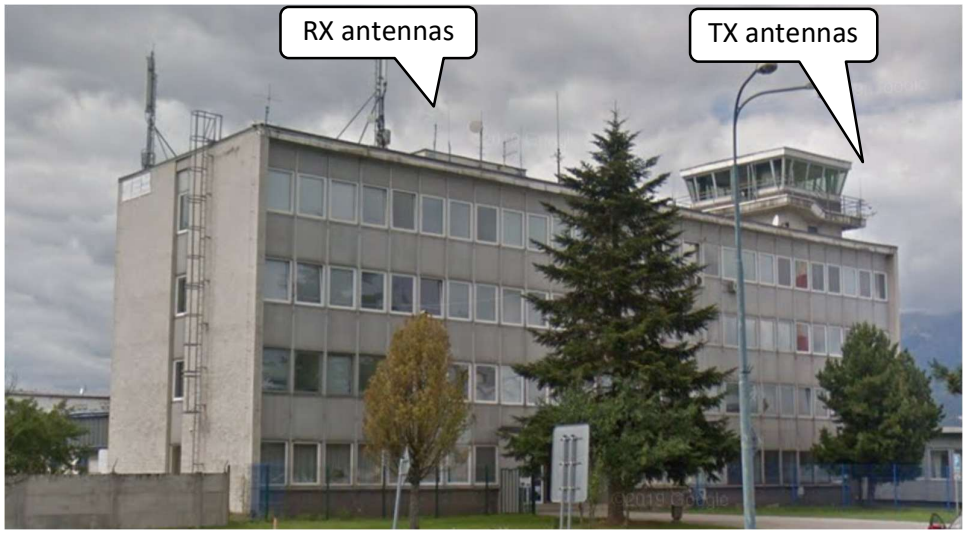

Figure 3 – Poprad-Tatry antenna location

The backup radio system for Poprad-Tatry is quite problematic in terms of frequency compatibility due to small distance between receivers and transmitters antennas and the small frequency spacing between the frequencies used by Control Tower.

The distance between TX and RX antennas is approximately 20m, it corresponds to the isolation 40 dB between RX and TX antennas. To increase the isolation, it is necessary to use the cascade of two Band-Pass filters type 1 together with Band-Stop filter for exact frequency.

Backup radio site for the **Airport Košice** is located directly at operation building below the Control Tower. Transmitters and receivers will use separate antennas for RX and TX with the distance approximately 20m horizontally and 20m vertically between TX-RX antennas. New RX antennas need to be installed with new antennas and coaxial feeders.

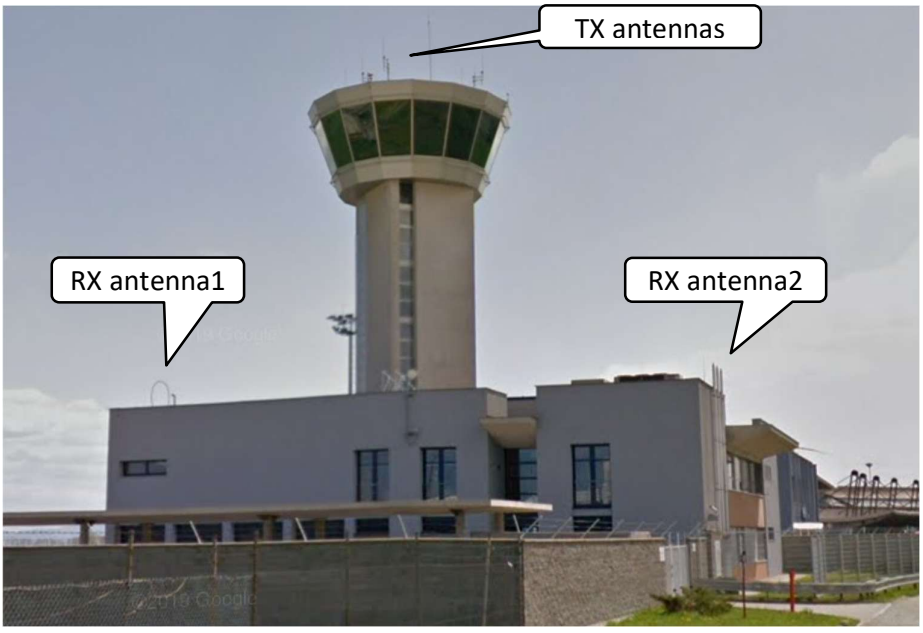

Figure 4 – Košice antenna location

1.9. *Quantity of equipment*

TS_1.9_1 The Contractor shall supply and put into operation all equipment in quantities as indicated in table below:

Equipment	ATCC	Poprad Tatry	Košice	Spare part	Summary
VHF Transmitter (TX)	32	-	-	2	34
UHF Transmitter (TX)	8	-	-	-	8
VHF Transceiver (TRX)	-	12 *Note	12 *Note	2 *Note	26
VHF Receiver (RX)	32	-	-	2	34
UHF Receiver (RX)	8	-	-	-	8
RF switch (for TX and antenna)	20	6	6	2	34
RF switch/coupler/hybrid for receiver	-	6	6	2	14
Antenna with RF lines	-	2	2	-	4
Antenna combiner	-	-	1	-	1
Double circulator VHF	16	6	6	-	28
Double circulator UHF	4	-	-	-	4
VHF Band-Pass Filter type 1	16	12	-	2	30
VHF Band-Pass Filter type 2	32	-	12	2	46
VHF Stop-Pass Filter	-	4	-	2	6
UHF Band-Pass Filter type 1	4	-	-	-	4
UHF Band-Pass Filter type 2	8	-	-	-	8
2-port Combiner/Starpoint	-	1	1	2	4
3-port Combiner/Starpoint	-	2	2	2	6
4-port Combiner/Starpoint	-	1	1	2	4
VHF RF power meter	16	2	2	2	22
UHF RF power meter	4	-	-	1	5
VHF 16-p Multicoupler	2	-	-	1	3
VHF 8-p Multicoupler	-	1	1	1	3
UHF 8-p Multicoupler	2	-	-	1	3
IO Extender and set of sensors	3	1	1	2	7
TX Cabinet	2	-	-	-	2
RX Cabinet	1	-	-	-	1
TRX Cabinet	-	1	1	-	2
TX Filter Cabinet	1	-	-	-	1
RX Filter Cabinet	2	-	-	-	2
TRX Filter Cabinet	-	1	-	-	1
Site RCMS system (HW+SW)	1	1	1	-	3
Central RCMS system (HW+SW)	1	-	-	-	1

***Note** – Contractor may offer 24 pcs + 2 spare of VHF transmitters and 24 pcs + 2 spare of VHF receivers instead of item 3 – VHF transceivers in amount 24 pcs + 2 spare.

1.10. *Site survey*

Site survey will be carried out with the Contractor after the Contract has been signed.

TS_1.10_1 The Contractor shall ask LPS for a site survey not later than one month after the Contract has been signed. The site survey shall be carried out during 3 working days.

TS_1.10_2 The Contractor shall perform the measurement of any known and possible interferences in order to avoid interferences during SAT tests. Much care shall be taken for Poprad Tatry and Košice where frequencies and antennas between RX and TX are too close.

TS_1.10_3 The contractor shall supply the Colocation analysis with the calculation of intermodulation products based on the measurements of the coupling between RX-TX antennas and the parameters of the RF path in order to eliminate possible interference between adjacent frequencies using supplied band-pass and stop-pass filters . The calculation shall include all RF equipment on the radio site. The Colocation analysis shall be a part of supplied documentation.

TS_1.10_4 The Contractor shall perform measurement of all existing antennas with coaxial cables and lightning protections in order to declare their suitability to be used for a new radio system. The Contractor shall submit measurement protocols together with a declaration of suitability for each antenna tract at each radio site not later than two weeks after the site survey.

Note: In the event that an antenna or its feeder will indicate degraded parameters, LPS will provide repair at its own expense until the installation of the new system.

2. EQUIPMENT SPECIFICATION

2.1. *General requirements*

Unless stated otherwise, general requirements must be applied to all equipment forming VHF/UHF radio communication system.

2.2. *Voice over Internet Protocol (VoIP)*

LPS plans to operate backup radio systems using an analogue audio interface and E&M signalization which will be used in the time period until the migration for VoIP operation.

TS_2.2_1 All radio equipment shall be designed in compliance with EUROCAE documents ED136, ED137/C and ED138. The Contractor shall guarantee compliance with the latest EUROCAE documents.

TS_2.2_2 All radios at the radio sites shall be equipped with 2 pieces of radio equipment Main and Standby (A/B) compliant to ED137/C.

TS_2.2_3 To enable connection to the VCS, all RX and TX radio devices must be equipped with a redundant Ethernet interface for VoIP. This means two separate physical Ethernet ports.

TS_2.2_4 To enable RCMS connectivity between the radio devices and the RCMS system, all radio devices shall use an Ethernet interface in accordance with EUROCAE ED136 and ED137/C.

TS_2.2_5 It shall be possible to configure the radio with two different IP addresses: one for audio (SIP/RTP) and one for remote control (RCMS).

TS_2.2_6 All radio equipment shall support at least seven SIP/RTP sessions simultaneously in order to connect to Main and Backup VCS, two recording systems, backup radio panel and to VCS operated by FAB partners.

TS_2.2_7 All radio equipment shall allow simultaneous connection to analogue and IP interface. The radio equipment shall be able to select automatically the 4W E&M interface, local microphone interface or IP interface applying the “who is first” principle. It shall be possible to lock the radios to operate solely for local operation (front panel) or for the analogue 4W E&M interface or for VoIP.

TS_2.2_8 The radio system using VoIP shall avoid any undesirable acoustic linking between two radios operating on the same frequency. In this case only one unit shall be selected and the remaining unit shall be blocked automatically (voting between radios).

TS_2.2_9 The radio system shall support automatic selection of the receiver based on the best reception quality. The Contractor shall describe in detail if other ways of voting are to be implemented.

TS_2.2_10 The radio system shall support simultaneous transmitting and receiving on several frequencies in order to enable the VCS operator to select coupling between several frequencies.

2.2.2. Environment Conditions

TS_2.2.2_1 The minimum range of operating temperature tolerance shall be from -20°C to +55°C.

TS_2.2.2_2 The Transmitter shall operate according to its specification at relative humidity at least 90% at +40°C.

TS_2.2.2_3 The installation altitude tolerance shall be from 0 to 2000 meters MSL.

2.2.3. Construction and Design

TS_2.2.3_1 The design and construction of the equipment shall be modern, based on up-to-date technical concepts related to such equipment. Electronic equipment shall be fully transistorized or/and with integrated circuits.

TS_2.2.3_2 Any special tools and special test equipment required shall be provided with the equipment.

TS_2.2.3_3 Site maintenance requirements shall be generally as low as possible. This particularly refers to the following:

- preventive maintenance inspections at the site shall not be required more often than two times per year;
- corrective maintenance at the site shall be executable by an easy module replacement, not requiring any complex skills or tools.

TS_2.2.3_4 All equipment shall be accompanied by technical manuals. Such technical manual shall be clear, concise and fully illustrated. Any special technique shall be fully described. The aforesaid technical manuals shall include complete installation, operation and maintenance instructions.

2.2.4. Radio Data Interface

TS_2.2.4_1 In order to enable connection to the VCS, all radio equipment RX and TX shall be equipped with redundant Ethernet interface for VoIP. It means two separated physical Ethernet ports for VoIP for each radio device.

TS_2.2.4_2 In order to enable RCMS connection between radio devices and the RCMS system, all radio equipment shall use Ethernet interface according to EUROCAE ED136 and ED137/C. Ethernet interface for RCMS can be shared with interface for VoIP.

TS_2.2.4_3 It shall be possible to configure the radio with 2 different IP addresses for audio (SIP/RTP) and remote control (RCMS).

TS_2.2.4_4 In order to enable local service configuration, the radio equipment shall have a dedicated Ethernet or USB service interface.

TS_2.2.4_5 The radio equipment RX and TX shall support SNMP v2c or/and v3 traps for remote control and supervision.

TS_2.2.4_6 The Contractor shall deliver MIB with detail description of all traps. The MIB shall contain traps defined in ED-137b together with proprietary traps.

TS_2.2.4_7 The radio equipment RX and TX shall support synchronization by the Network Time Protocol version 3 according to RFC1305. The radio shall use a local connection to obtain the Time reference signals from simultaneous connection to 2 remote NTP addresses (main and standby NTP servers). Ethernet interface for NTP can be shared with interface for VoIP or RCMS.

TS_2.2.4_8 The Contractor shall deliver and install service software in the Site RCMS computers and laptops in order to perform radio diagnostics and change radio equipment settings via service interface.

TS_2.2.4_9 It shall be possible to set up the Climax Time Delay for all radios.

TS_2.2.4_10 For the purposes of maintenance, it shall be possible to download radio configuration from a radio to a PC and upload radio configuration from a PC to a radio.

2.2.5. Safety Precautions

TS_2.2.5_1 Measures shall be taken to protect the equipment against any effects of overcurrent or over-voltage. Protection of the DC power input may be provided by an external circuit protection device included in the scope of supply.

TS_2.2.5_2 The design and construction of the equipment shall not permit any significant change to its standard operation resulting from usual dust accumulation on its composing parts.

TS_2.2.5_3 In order to protect standard operation, no special precautions against dust shall generally be required at the equipment installation site.

TS_2.2.5_4 Special safety devices such as protective covers shall be provided - for example, blanking panels for DIN-rail circuit-breaker rows and installation/enclosure boxes providing protection against contact with live parts.

2.3. *VHF and UHF Transmitter requirements*

2.3.1. Construction and Design

TS_2.3.1_1 All transmitters shall be housed in individual 19" rack enclosures. The width of a transmitter shall allow installation of two transmitters into one 19" slot.

TS_2.3.1_2 The reliability shall be as high s possible, warranting at least 25.000 hours a mean time between failures (MTBF) with normal periodic maintenance and a mean time to repair (MTTR) of no more than 30 min.

TS_2.3.1_3 Each Transmitter shall be accompanied by a set of technical manuals. The technical manuals provided shall be clear, concise and fully illustrated including circuit schematic diagrams. Any special technique shall be fully described. The aforesaid technical manuals shall include complete installation, operation and maintenance instructions.

TS_2.3.1_4 Built-in-test facilities enabling immediate fault location in the case of a failure shall be available.

TS_2.3.1_5 The VHF/UHF transmitter shall include an adjustable timeout function, adjustable from 0 (disabled) to at least 3 minutes.

TS_2.3.1_6 The VHF/UHF transmitter shall have the capability to withstand continuous 24 hours of uninterrupted transmission (100 % duty cycle) at full power and modulation across the full temperature range up to 40°C, without any degradation of RF parameters (mainly for ATIS and VOLMET transmitters).

2.3.2. Electrical Characteristics

TS_2.3.2_1 The VHF transmitter shall be tunable within the range from 118 to 136,975 MHz without any change of elements. The equipment shall comply with all aspects of this specification within the specified frequency range.

TS_2.3.2_2 The UHF transmitter shall be tunable within the range from 225 to 399,975 MHz without any change of elements. The equipment shall comply with all aspects of this specification within the specified frequency range.

TS_2.3.2_3 The transmitter shall have a multichannel feature allowing up to 100 frequency channels to be programmed, sorted and recalled based on the channel number.

TS_2.3.2_4 The frequency error for VHF transmitter shall be within ± 1 x 10-6 over the whole range and under the above mentioned environmental conditions.

TS_2.3.2_5 The frequency error for UHF transmitter shall be within ± 5 x 10-6 over the whole range and under the above mentioned environmental conditions.

TS_2.3.2_6 The type of emission shall be Double Side Band Amplitude Modulation, A3E for voice.

TS_2.3.2_7 The channel spacing for VHF transmitter shall be configurable to 25 kHz and 8,33 kHz raster.

TS_2.3.2_8 The channel spacing for UHF transmitter shall be 25 kHz.

TS_2.3.2_9 The VHF transmitter shall support 5 carrier frequency offset for 25 kHz spacing and 2 carrier frequency offset for 8.33 kHz spacing.

TS_2.3.2_10 The minimum carrier output power for a VHF transmitter delivered into a 50 Ohms load with a VSWR ≤ 1,5 shall be:

- 25 W for TWR A/G Communications and
- 50 W for ACC and APP A/G Communications.

TS_2.3.2_11 The minimum carrier output power for a UHF transmitter delivered into a 50 Ohms load with a VSWR up to 2:1 shall be 30 W.

TS_2.3.2_12 The carrier power tolerance shall be in the range ± 1 dB at maximum power.

TS_2.3.2_13 The VHF/UHF transmitter shall enable adjustment of output power from 5 W up to the upper limit in 1W steps. This operation shall be easy performed through RCMS software application and by portable PC through an external dedicated port at any time.

TS_2.3.2_14 Protection against VSWR infinity shall be provided and any mismatch shall not cause any damage.

TS_2.3.2_15 Special input accepting a suitable microphone capable to modulate the transmitter up to 90% shall be available on the front panel.

TS_2.3.2_16 The 3 dB AF bandwidth shall be from 300 to 3400 Hz for 25 kHz channel spacing.

TS_2.3.2_17 The 3 dB AF bandwidth shall be from 350 to 2500 Hz for 8.33 kHz channel spacing.

TS_2.3.2_18 The response shall be attenuated by at least 25 dB at 5 kHz and 15 dB at 100 Hz for 25 kHz channel spacing.

TS_2.3.2_19 The response shall be attenuated by at least 25 dB at 3.2 kHz and 15 dB at 100 Hz for 8.33 kHz channel spacing.

TS_2.3.2_20 The modulation depth should be adjustable up to 90 %. A limiter shall limit the modulation depth to 95 %.

TS_2.3.2_21 The Amplitude Modulation Distortion shall be ≤ 5 % to be measured with the test tone of 1000 Hz at m = 90 % and below.

TS_2.3.2_22 The adjacent channel power shall not exceed the following values below the carrier power of the transmitter:

- 55dB (for 8.33 kHz channel spacing); and
- 65dB (for 25 kHz channel spacing)

TS_2.3.2_23 For checking the modulation quality, clipper function etc., a demodulator with a filtered AF output up to 100 kHz, or adequate monitoring means shall be provided.

2.3.3. Radiation Characteristics

TS_2.3.3_1 Harmonics of the carrier frequency shall not exceed 5×10^{-7} W at the connector between the radio cabinet and the antenna.

TS_2.3.3_2 Any other radiation shall not exceed 5 x 10-7 watts. This radiation shall be measured at a 50-ohm load directly at the transmitter output up to 4-th harmonics.

TS_2.3.3_3 The Cabinet Radiation shall not exceed 0.25 µW within a bandwidth of 1 kHz over the frequency range from 30 MHz to 1 GHz.

TS_2.3.3_4 Shielding should be such that the direct radiation of the transmitter housing and cabling does not produce a field strength of more than 30 µV/m at a distance of 30 m with cabinet doors open.

TS_2.3.3_5 Inter modulation Products Emission shall be at least 40dB below a carrier level for the 3rd order inter modulation product caused by a signal of a transmitter with the same output power decoupled 30 dB and with emitting frequency deviation within 50 to 100 kHz below the frequency of the transmitter under test.

TS_2.3.3_6 In the case of severe inter modulation products with many frequencies and close frequency distances, the inter modulation problem has to be solved at the system level by using additional circulators, filters, sufficient antenna separation, etc.

TS_2.3.3_7 Out Of-Band Noise shall be at least 145 dB/Hz below the carrier level for frequencies separated more than 1 % from the carrier frequency.

2.3.4. Tuning

TS_2.3.4_1 The tuning of the transmitter shall be easy and quick and shall be carried out by:

- means of built-in remote control and monitoring devices;
- setting the frequency on the transmitter control panel;
- setting the frequency on the connected Computer via the service channel.

TS_2.3.4_2 No measuring devices shall be required to tune the transmitter.

TS_2.3.4_3 The application of the tuning procedure shall avoid generation of any frequency other than the one determined by the crystal or synthesizer.

TS_2.3.4_4 The whole tuning procedure shall be easily accessible when working on the transmitter.

TS_2.3.4_5 The spurious radiation requirements shall be met when the transmitter has been tuned in accordance with the procedure given in the manual.

2.3.5. Push-To-Talk

TS_2.3.5_1 Transmitters shall be capable of both local and remote keying. In order to enable remote keying, a PTT activation contact interface shall be available. In order to enable local keying, a microphone interface with PTT contacts shall be available on the front panel.

TS_2.3.5_2 The Transmitter shall be able to detect PTT signal sent via:

- Copper cable directly from the VCS system with up to 4000m long, 0.6 mm wire diameter;
- E&M 4 wire analogue interface of the PCM multiplex located on radio site.

TS_2.3.5_3 A relay contact outside the transmitter closing a circuit to the earth shall key the transmitter.

TS_2.3.5_4 The time delay between closing a circuit to the earth and full power shall be less than 20 ms.

TS_2.3.5_5 Voltage on the load applied to the contact shall not exceed 50 V, 100 mA DC.

TS_2.3.5_6 Spark suppression/overvoltage protection devices for PTT interface shall be provided in the transmitter.

2.3.6. Analogue Interfaces

TS_2.3.6_1 The Transmitter shall have local audio microphone interface and remote audio input.

TS_2.3.6_2 The remote AF input shall be designed for a direct connection to audio lines, i.e. for 600 ohms balanced, and a configurable range of audio level between – 30 and +10 dBm.

TS_2.3.6_3 Local operation from the front-panel shall be provided by means of a microphone modulation input, which is insulated from the balanced audio line.

TS_2.3.6_4 It shall be possible to disconnect the Automatic Gain Control.

2.3.7. External Interfaces:

TS_2.3.7_1 In order to enable connection to the SWR monitor, each transmitter shall have a dedicated optoisolated interface or TTL interface or an equivalent interface serving the same purpose.

TS_2.3.7_2 In order to enable monitoring of external devices (e.g. user contacts), each transmitter shall have a dedicated optoisolated interface or TTL interface or an equivalent digital contact input.

TS_2.3.7_3 In order to enable the Main/Standby antenna RF Switch changeover, each transmitter shall have a dedicated RF Switch interface.

2.3.8. RF Interfaces

TS_2.3.8_1 RF interfaces shall be used for connecting antennas to radios. The impedance of the RF interfaces shall be 50Ω, unbalanced.

TS_2.3.8_2 The antenna (RF power) output connector shall be of a coaxial type N female; other RF interfaces of the transmitter and transceiver shall be of type N female or BNC female, consistent with TS_2.4.6_3.

TS_2.3.8_3 Transmitters shall not be damaged if the RF interface is open (Z=∞) or short circuited (Z=0).

TS_2.3.8_4 Protection against VSWR infinite shall be provided and damage due to any type of mismatch shall be prevented.

2.3.9. Power Supply

TS_2.3.9_1 For AC supply the equipment shall be designed for 230 V AC single phase.

TS_2.3.9_2 The frequency 50 Hz ± 2 % shall be met.

TS_2.3.9_3 AC Supply Voltage Variation tolerance -10/+10 % shall be met.

TS_2.3.9_4 28 V DC operations shall be available for back-up purposes.

TS_2.3.9_5 DC Supply Voltage Variation tolerance from 22 to 31 V DC shall be met.

TS_2.3.9_6 The performance of the transmitter as specified above shall be reached for unlimited periods with the supply voltage variation as specified in TS_2.3.9_3.

TS_2.3.9_7 The transmitter shall have an automatic emergency power switchover from AC to DC and back.

2.3.10. Local Control and Monitoring

TS_2.3.10_1 On the front panel, lamps/display shall indicate the following functions:

- Power on
- Equipment transmitting
- Alarm Indication
- AC and DC voltages
- output power
- modulation depth
- VSWR monitor

TS_2.3.10_2 Front panel controls shall include:

- Power on/off switching
- Local/Remote control switch
- test transmitting with and without modulation 1kHz

2.3.11. Remote Control and Monitoring

Overall remote control requirements are specified in the chapter 5 – Remote Control and Monitoring System (RCMS). On top of that, all transmitters shall satisfy the following requirements.

TS_2.3.11_1 The transmitter shall be able to monitor and send next parameters or statuses to RCMS:

- TX ready,
- Power status with measuring operational voltage,
- AC and DC power supply,
- Alarm status,
- Internal temperature,
- RF Level of transmitter power,
- Modulation type and depth of output RF power,
- VSWR current level value,
- Synthesizer lock,
- Level at audio interface input,
- Carrier status / transmitter activation indication,
- Operating frequency, channel set, memory,
- Channel spacing, frequency carrier offset

TS_2.3.11_2 The transmitter shall enable to set other parameters and functions sent from RCMS:

- Frequency channel set/memory/recall,
- Channel spacing (8.33 kHz or 25 kHz) setting,
- Frequency carrier offset setting,
- RF output power setting (at least three levels or continuous adjustment within the specified range),
- Type of modulation (AM, VDL),
- Stand-by mode setting (on/off),
- TX inhibit (on/off),
- PTT on/off switching,

2.4. *VHF and UHF Receiver requirements*

2.4.1. Construction and Design

TS_2.4.1_1 All receivers shall be capable of being installed in a 19-inch rack cabinet. The width of the receivers shall allow four receivers to be installed in a single 19-inch rack slot, with a maximum height of 3U, in accordance with Figure 10 – Cabinets for Receivers and Filters at the ATCC.

TS_2.4.1_2 The reliability shall be as high as possible, warranting at least a 40.000 hours mean time between failures (MTBF) with normal periodic maintenance and a mean time to repair (MTTR) no more than 30 min.

TS_2.4.1_3 Each receiver shall be accompanied by a set of technical manuals. The technical manuals provided shall be clear, concise and fully illustrated. Any special technique shall be fully described. The aforesaid technical manuals shall include complete installation, operation and maintenance instructions.

TS_2.4.1_4 The VHF/UHF receiver shall have the capability of continuous uninterrupted reception in the Main or Standby mode (100 % duty cycle).

TS_2.4.1_5 Built-in-test facilities enabling immediate fault location in the case of a failure shall be available.

2.4.2. Electrical Characteristics

TS_2.4.2_1 The VHF Receiver shall be tunable within the range from 118 to 136,975 MHz without any change of elements. The equipment shall comply with all aspects of this specification within the specified frequency range.

TS_2.4.2_2 The UHF Receiver shall be tunable within the range from 225 to 399,975 MHz without any change of elements. The equipment shall comply with all aspects of this specification within the specified frequency range.

TS_2.4.2_3 The VHF and UHF receiver shall have a multichannel feature allowing up to 100 frequency channels to be programmed, sorted and recalled based on the channel number.

TS_2.4.2_4 The frequency error shall be within ±1x10-6 over the whole range and under the above mentioned environmental conditions.

TS_2.4.2_5 The type of reception shall be Double Side Band Amplitude Modulation, A3E for voice.

TS_2.4.2_6 The channel spacing for VHF receiver shall be configurable to 25 kHz and 8.33 kHz raster.

TS_2.4.2_7 The channel spacing for UHF receiver shall have 25 kHz raster.

TS_2.4.2_8 The tuning of the receiver shall be easy and quick and it shall be carried out by:

- means of built-in remote control and monitoring devices;
- setting the frequency on the receiver control panel;
- setting the frequency on the connected Computer via the service channel.

TS_2.4.2_9 No measuring devices shall be required to tune the receiver.

TS_2.4.2_10 The spurious radiation requirements described below shall be met when applying the tuning procedure.

TS_2.4.2_11 The input impedance shall be 50 Ohms and the VSWR shall be better than 2:1 at the tuned frequency.

TS_2.4.2_12 The sensitivity shall be -107dBm for VHF and –105 dBm for UHF or less for a signal-to-noise ratio (S+N/N) at the receiver output 10 dB at least for an input signal modulated 30 % at 1 kHz.

TS_2.4.2_13 The audio output level variation shall not exceed 3 dB for an input voltage between 1µV and 200mV for an input signal modulated 60 % at 1 kHz.

TS_2.4.2_14 The receiver shall incorporate a means to suppress noise at the 600 Ohms output by at least 70 dB in the absence of a wanted signal.

TS_2.4.2_15 When the input signal exceeds the threshold by 3 dB the squelch shall open at all RF inputs above 1µV, and in less than 40ms for both 25 kHz and 8.33kHz raster.

TS_2.4.2_16 A pre-set squelch control which meets the requirements of ETSI EN 300676-1 Paragraph 8.11.3 shall be provided for VHF and the corresponding requirement of EN 302 617 for UHF.

TS_2.4.2_17 The squelch shall be independent of the audio output level control.

TS_2.4.2_18 A failure of the squelch circuit itself shall not inhibit transmission of the audio signal to a line.

TS_2.4.2_19 It shall be possible to disconnect the squelch operation.

TS_2.4.2_20 The squelch signal shall be available for control of the frequency and channel distribution system. Therefore, when the squelch opens, an insulated relay contact shall close a circuit to the earth within 40 msec.

TS_2.4.2_21 The squelch characteristic shall be such that the receiver is effectively silenced after cessation of a signal without any noticeable rise of the noise level at the receiver output.

TS_2.4.2_22 The squelch operation shall be accompanied by illumination of a front panel lamp or any other suitable indicator.

TS_2.4.2_23 The squelch circuit shall be immune from false operation by impulsive interference without causing an operating delay greater than 40ms for both 25 kHz and 8.33kHz raster.

TS_2.4.2_24 The squelch characteristics shall not involve electrical backlash greater than 3 dB with a tolerance as declared in the manufacturer's data sheet relative to the threshold setting at any level within the range of the squelch control. It shall also be independent from the modulation depth.

TS_2.4.2_25 The temperature stability of the squelch threshold shall be such that the variation of the threshold shall not exceed 3 dB for the temperature range defined above.

2.4.3. Overall Selectivity

TS_2.4.3_1 The Spurious response rejection is measured by the two signal generators method. Two input signals are applied to the receiver input as follows:
- Signal A (on channel), modulated 30 % at 1 kHz to produce an S/N ratio of 10dB.
- Signal B from 100 kHz to 2000MHz, modulated by 60% at 400Hz.

Then the signal B shall be at least 90dB for VHF and 80 dB for UHF above the signal A to reduce the S+N/N by 3dB.

TS_2.4.3_2 The Image Response Rejection is measured by the two signal generators method. Two input signals are applied to the receiver input as follows:
- Signal A (on channel), modulated 30% at 1 kHz to produce a S/N ratio of 10dB.
- Signal B (on image frequency), modulated by 60% at 400Hz.

Then the signal B shall be at least 100dB for VHF and 80 dB for UHF above the signal A to reduce the S+N/N by 3dB.

TS_2.4.3_3 The IF Response Rejection is measured by the two signal generators method. Two input signals are applied to the receiver input as follows:
- Signal A (on channel), modulated 30% at 1 kHz to produce a S/N ratio of 10dB.
- Signal B (on IF frequency), modulated by 60% at 400 Hz.

Then the signal B shall be at least 90dB above the signal A to reduce the S+N/N by 3dB.

TS_2.4.3_4 The Adjacent Channel Selectivity is measured by the two signal generators method. Two input signals are applied to the receiver input as follows:
- Signal A (on channel), modulated 30% at 1 kHz to produce a S/N ratio of 10dB.
- Signal B (adjacent ch.), ± 25 kHz (25k Hz raster), modulated by 60 % at 400 Hz.
- Signal B (adjacent ch.), ± 8.33 kHz (8.33 kHz raster), modulated by 60 % at 400 Hz.

Then the signal B shall be at least 60dB above the signal A to reduce the S+N/N by 3dB.

TS_2.4.3_5 The Cross – Modulation shall be measured with two carriers, A and B.

- A is unmodulated and represents the wanted signal.
- B is modulated 60% at 400Hz and spaced at ± 100 kHz from A and represents the unwanted signal.

For a 10dB S+N/N level at the receiver output, the unwanted signal level shall be at least 90dB for VHF and 80dB for UHF above the wanted signal.

TS_2.4.3_6 Blocking The receiver blocking (desensitization) ratio for ground/base-station equipment shall be ≥ 90 dB in both the VHF and the UHF, tested in accordance with ETSI EN 300 676-1 (VHF) and ETSI EN 302 617 (UHF), under the following conditions:

- Wanted signal: AM modulated 30 % at 1 kHz, applied at the receiver sensitivity level on the nominal frequency.
- Interfering signal: unmodulated, at ±1 MHz from the wanted signal (VHF) / ±3,125 MHz, i.e. 1 % offset (UHF).
- Criterion: the interfering-signal level is increased until the wanted audio output is reduced by 3 dB, or the psophometrically-weighted SINAD is reduced to 6 dB.
- Limit: the resulting blocking ratio (interfering level ÷ wanted level) shall be ≥ 90 dB according to the UHF Harmonised-Standard minimum (EN 302 617 § 7.6.3) and above the VHF minimum of 80 dB (EN 300 676-1 § 8.9.3).

TS_2.4.3_7 Intermodulation shall be measured by using signal generators:

- Signal Generator A (on channel) modulated 30 % at 1 kHz, the receiver adjusted to give a (S+N/N) ratio of 10dB.
- Signal Generator B offset by ±100kHz and ±200kHz from A, unmodulated.

Then the equal signals B shall be at least 80 dB for VHF and 75dB for UHF above the signal A to reduce the S+N/N by 3dB.

2.4.4. Audio Output

TS_2.4.4_1 The overall gain shall be sufficient to produce an audio output level of at least 1mW into 600 ohms for a RF input of 1µV modulated with a depth of 60 % at 1 kHz.

TS_2.4.4_2 The audio output shall be provided by means of a balanced 600-ohm transformer suitable for direct connection to analogue lines. The output level shall be configurable in a range between -30dBm and +10dBm adjustable by 1dBm steps.

TS_2.4.4_3 With a center RF input frequency of 1mV modulated 30% and in the frequency band from 300 to 3400Hz, the audio output level shall not vary by +3/-4dB with reference to the level at 1kHz for 25kHz channel spacing receiver.

TS_2.4.4_4 With a center RF input frequency of 1mV modulated 30% and in the frequency band from 350 to 2500Hz, the audio output level shall not vary by +3/-4dB with reference to the level at 1kHz for 8.33kHz channel spacing receiver.

TS_2.4.4_5 The response shall be attenuated by at least 25dB at 5 kHz for 25 kHz channel spacing.

TS_2.4.4_6 The response shall be attenuated by at least 25dB at 3.2 kHz for 8.33 kHz channel spacing.

TS_2.4.4_7 With the audio gain control set to a power output of 1mW at the 600 ohm terminals for a RF input of 3µV (EMF) modulated 60% at 1kHz, any RF input between 1mV (EMF) and 100mV (EMF) modulated 60% at 1kHz shall not produce an excess of 5% T.H.D. respectively at the 600 ohm output.

TS_2.4.4_8 With the set power output of 1mW at the 600 ohm terminals for a RF input of 3µV (EMF) modulated 60% at 1kHz, any RF input between 1mV (EMF) and 100mV (EMF) modulated 90% at 1kHz the ratio S/S+N shall be better (higher) than 50dB.

TS_2.4.4_9 If the receiver includes a noise limiter, it shall be efficient with 100% modulation. The operation of the noise limiting circuits should not involve a noticeable depression of the wanted audio output. Distortion of audio signals whose peaks modulate up to 100 % should be minimal.

2.4.5. Squelch indication interfaces

TS_2.4.5_1 Each receiver shall have a squelch indication interface, which shall enable systems connected to this interface to receive information about the status of squelch (open/close).

TS_2.4.5_2 When the squelch opens, an insulated relay contact shall close a single wire contact SQ to the earth, or floating two-wire voltage-free contact shall close. The contact closure shall occur within 20 ms from the time the squelch opens by TS_2.4.2_15.

TS_2.4.5_3 The squelch indication signal shall be sent to VCS systems via:

- Copper cable directly to the VCS system with up to 4000m long, 0.6 mm wire diameter.
- E&M 4 wire analogue interface of the PCM multiplex located on a radio site.
- VoIP.

2.4.6. RF Interface

TS_2.4.6_1 RF interface shall be used for connecting a receiver to the multicoupler (or to the transmitter in transceiver).

TS_2.4.6_2 The impedance of the RF interface shall be 50Ω, unbalanced.

TS_2.4.6_3 RF input connectors shall be of a coaxial type N female or BNC female.

TS_2.4.6_4 The RF interface shall not be damaged by RF power up to +20dBm.

TS_2.4.6_5 The permissible input voltage without causing any damage shall be 5 V at least independently the signal frequency.

2.4.7. Radiation Characteristics

TS_2.4.7_1 The receiver shall be adequately screened to permit operation of any number of receivers at one location and co-location with transmitters.

TS_2.4.7_2 The oscillator radiation shall not exceed 2nW (10μV/50 Ohms) within a bandwidth of 1kHz when measured at the 50 ohm antenna input over the frequency range from 9 kHz to 1 GHz.

TS_2.4.7_3 The receiver shall meet the relevant international requirements for screening and direct radiation.

2.4.8. Power Supply

TS_2.4.8_1 For AC supply, the equipment shall be designed for 230 V AC single phase.

TS_2.4.8_2 The frequency 50 Hz ± 2 % shall be met.

TS_2.4.8_3 AC Supply Voltage Variation tolerance -10/+10 % shall be met.

TS_2.4.8_4 28 V DC operations shall be available for back-up purposes.

TS_2.4.8_5 DC Supply Voltage Variation tolerance from 22 to 31 V DC shall be met.

TS_2.4.8_6 The receiver performance as specified above shall be met for unlimited periods with the supply voltage variation as specified.

TS_2.4.8_7 The receiver shall have an automatic emergency power switchover from AC to DC and back.

2.4.9. Receiver Control and Monitoring

TS_2.4.9_1 On the front panel indication equipment the following functions shall be indicated:

- Power on;
- Equipment receiving to be provided by squelch indication and/or by displaying the received signal level;
- Squelch indication;
- Alarm Indication.

TS_2.4.9_2 The front panel controls shall include:

- Power on/off switch and indication;
- Local / Remote control switch;
- A connector for headset connection.

2.4.10. Remote Control

Overall remote control requirements are specified in the chapter 5 – Remote Control and Monitoring System (RCMS). On top of that, all receivers shall satisfy the following requirements.

TS_2.4.10_1 The receiver shall be able to monitor and send the following parameters or statuses to RCMS:

- Power status AC and DC with measuring operational voltage;
- Receiver ready;
- Alarm status;
- Internal temperature;
- Active receiving;
- Level of audio output;
- Demodulation type;
- Operating frequency, channel set, memory;
- Channel spacing.

TS_2.4.10_2 The receiver shall enable to set the following parameters and functions sent from RCMS:

- Frequency channel set/memory/recall;
- Channel spacing (8.33 kHz or 25 kHz) setting;
- Type of modulation (AM, VDL);
- Stand-by mode setting (on/off).

2.5. *VHF and UHF Transceiver requirements*

TS_2.5_1 Unless otherwise stated, VHF/UHF transceivers shall satisfy all requirements specified for VHF/UHF transmitters and VHF/UHF receivers.

TS_2.5_2 The VHF/UHF transceiver shall consist of a VHF/UHF transmitter and a VHF/UHF receiver with adaptation to transceiver equipment with a common MMI panel.

TS_2.5_3 All transceivers shall be housed in individual 19” rack enclosures. The width of transceivers shall allow installation of two transceivers into one 19” slot.

TS_2.5_4 The reliability shall be as high as possible, warranting at least a 20.000 hours mean time between failures (MTBF) with normal periodic maintenance and a mean time to repair (MTTR) no more than 30 min.

TS_2.5_5 A receiver embedded into a transceiver shall be able to receive RF signal from transmission of the embedded transmitter. Demodulated signal shall be available on RX audio output for recording the transmission.

2.6. *RX Multicoupler specification*

The VHF/UHF radio system includes 8 ports and 16 ports VHF and 8 ports UHF Multicouplers for receivers. The main task of a multicoupler is to suppress interference from high-power VHF FM and TV signals as well as GSM and other signals outside of VHF air bands.

2.6.1. Construction and Design

TS_2.6.1_1 All types of Multicouplers shall be housed in 19" rack enclosures.
TS_2.6.1_2 The RX Multicoupler shall be installed in the same cabinet with the filters.
TS_2.6.1_3 The VHF/UHF multicoupler shall have the capability to withstand continuous 24hour uninterrupted reception at a full temperature range, without any degradation of RF parameters.
TS_2.6.1_4 The reliability shall be as high as possible, warranting at least a 40.000 hours mean time between failures (MTBF) with normal periodic maintenance and a Mean Time To Repair (MTTR) no more than 30 min.
TS_2.6.1_5 Built-in-test facilities enabling alarm status in the case of a failure shall be available and shall be implemented in the RCMS system.
TS_2.6.1_6 The Multicoupler shall use high-quality low noise redundant active amplifiers.

2.6.2. Electrical Characteristics

TS_2.6.2_1 The VHF multicoupler shall operate over the band of 118-137 MHz and UHF multicoupler shall operate over the band of 225-400 MHz. The Multicouplers shall comply with all aspects of this specification within the specified frequency range.
TS_2.6.2_2 The input and output VSWR shall be better than 1.5:1 for VHF and UHF multicoupler.
TS_2.6.2_3 The interface for antenna and receivers shall have the impedance of 50Ω, unbalanced with coaxial connector type N female.
TS_2.6.2_4 The Multicoupler shall have integrated protective circuits at the RF input to protect connected receivers against large signals.
TS_2.6.2_5 The permissible input voltage without causing damage shall be at least +15dBm independently of the signal frequency.
TS_2.6.2_6 The 8port VHF and UHF multicoupler shall serve to feed 8 receivers from a single antenna.
TS_2.6.2_7 The 16port VHF multicoupler shall serve to feed 16 receivers from a single antenna.
TS_2.6.2_8 The gain on RF output shall be in the range of 2dB ±2.
TS_2.6.2_9 The isolation between any two channels shall not be less than 27dB for VHF and 23dB for UHF multicoupler.
TS_2.6.2_10 The intermodulation suppression IP3 on the output shall be at least +32dBm.
TS_2.6.2_11 The VHF multicoupler shall have suppression referenced to middle frequency 127 MHz:
- for VHF FM band better than -25dBr for frequencies up to 108 MHz;
- for UHF TV band better than -25dBr for frequency range 470-1000 MHz.

TS_2.6.2_12 The UHF multicoupler shall have suppression referenced to middle frequency 310 MHz:
- for VHF FM band better than -25dBr for frequencies up to 200 MHz;
- for UHF TV band better than -25dBr for frequency range 500-1000 MHz.

TS_2.6.2_13 The noise figure shall not exceed 7dB.

2.6.3. Power Supply

TS_2.6.3_1 For AC supply the equipment shall be designed for 230 V AC single phase.
TS_2.6.3_2 The frequency 50Hz ±2% shall be met.
TS_2.6.3_3 AC Supply Voltage Variation tolerance -10/+15 % shall be met.
TS_2.6.3_4 28 V DC operations shall be available for back-up purposes.
TS_2.6.3_5 DC Supply Voltage Variation tolerance from 22 to 31 V DC shall be met.

TS_2.6.3_6 The Multicoupler performance as specified above shall be met for unlimited periods with the supply voltage variation as specified.

TS_2.6.3_7 The Multicoupler shall have an automatic emergency power switchover from AC to DC power supply in order to provide continuous uninterrupted operation.

2.7. *VHF and UHF Circulator*

The Circulators will be installed at all transmitter radio sites in order to increase coupling attenuation between transmitters and to reduce products of inermodulation.

2.7.1. Construction and Electrical Characteristics

TS_2.7.1_1 Operating temperature tolerance shall be from 0°C to +50°C.

TS_2.7.1_2 The Circulator shall be housed in 19" rack enclosures.

TS_2.7.1_3 The VHF Circulator shall operate over the band of 118-137 MHz.

TS_2.7.1_4 The UHF Circulator shall operate over the band of 225-400 MHz.

TS_2.7.1_5 The RF interfaces to antenna and transmitter shall have the impedance of 50Ω, unbalanced with a coaxial connector type N female.

TS_2.7.1_6 The absorber resistor shall be an integral part of circulators.

TS_2.7.1_7 The absorber resistor shall be capable of absorbing and dissipating the maximum power reflected at output up to 50W.

TS_2.7.1_8 Circulators shall be designed for the maximum continuous throughput power of 50W.

2.7.2. VHF Circulator

TS_2.7.2_1 The insertion loss for a VHF circulator shall not exceed 1 dB.

TS_2.7.2_2 The backward isolation for a VHF circulator shall be at least 40 dB.

2.7.3. UHF Circulator

TS_2.7.3_1 The insertion loss for a UHF circulator shall not exceed 1.6 dB.

TS_2.7.3_2 The backward isolation for a UHF circulator shall be at least 36 dB.

2.8. *Filter specification*

All radio sites will be equipped with filters in order to prevent any interference from external sources and to increase coupling attenuation between transmitters and to reduce products of intermodulation.

Attention:
The contractor can supply individual filters and connect them according to the requirements with other RF components, or can supply RX multicouplers and TX multi-channel multicouplers directly equipped with circulators and starpoints. LPS prefers a solution with multicouplers.

2.8.1. Construction and Electrical Characteristics

TS_2.8.1_1 All Filters shall be housed in 19" rack enclosures.

TS_2.8.1_2 All Filters shall have both input and output coaxial connectors with the impedance of 50Ω, unbalanced type N female.

TS_2.8.1_3 All Filters shall be manually tuned by a control element on the rear or front panel.

TS_2.8.1_4 The cavity impedance shall be 50Ω.

TS_2.8.1_5 The tuning range for a VHF Band-Pass and Stop-Pass filters shall be within 118-137 MHz.

TS_2.8.1_6 The tuning range for a UHF Band-Pass filter shall be within 225-400 MHz.

TS_2.8.1_7 All Filters shall be equipped with an adjustable mechanism for easy re-tuning. The mechanism shall allow adjusting the input/output return loss/attenuation of the filter without any impact on the pre-selected frequency tuning.

2.8.2. VHF Band-Pass filter type 1

TS_2.8.2_1 VHF Filter type 1 shall be a band pass filter which consists of 1 cavity per channel.
TS_2.8.2_2 The selectivity shall be at least 15 dB in the frequency range of ±0.5% of tuned frequency.
TS_2.8.2_3 The cavity insertion loss shall not exceed 1.6 dB for the frequency range of 118-137 MHz.
TS_2.8.2_4 The maximum continuous power shall be at least 100W.
TS_2.8.2_5 Due to a lack of space, two pieces of VHF filters type 1 shall be integrated into a common 19" frame with maximum frame size 5U.

2.8.3. VHF Band-Pass filter type 2

TS_2.8.3_1 VHF Filter type 2 shall be a band pass filter which consists of 1 cavity per channel.
TS_2.8.3_2 Two pieces of VHF filters type 3 shall be integrated into a 19" frame.
TS_2.8.3_3 The selectivity shall be at least 12 dB in the frequency range of ±500 kHz with the middle frequency of 127.5 MHz under insertion loss 1 dB.
TS_2.8.3_4 The cavity insertion loss shall not exceed 2 dB for the frequency range of 118-137 MHz.
TS_2.8.3_5 Due to a lack of space, two pieces of VHF filters type 2 shall be integrated into a common 19" frame with maximum frame size 4U.

2.8.4. UHF Band-Pass filter type 1

TS_2.8.4_1 UHF Filter type 1 shall be band a pass filter which consists of 1 cavity per channel.
TS_2.8.4_2 The selectivity shall be at least 15 dB in the frequency range of ±0.5% of tuned frequency.
TS_2.8.4_3 The cavity insertion loss shall not exceed 1.6 dB for the frequency range of 225-400 MHz.
TS_2.8.4_4 The maximum continuous power shall be at least 100W.
TS_2.8.4_5 Due to a lack of space, two pieces of UHF filters type 1 shall be integrated into a common 19" frame with maximum frame size 5U.

2.8.5. UHF Band-Pass filter type 2

TS_2.8.5_1 UHF Filter type 2 shall be a band pass filter which consists of 1 cavity per channel.
TS_2.8.5_2 The selectivity shall be at least 15 dB in the frequency range of ±1.2 MHz with insertion loss of 1 dB at mid of the UHF band.
TS_2.8.5_3 The cavity insertion loss shall not exceed 2 dB for the frequency range of 225-400 MHz.
TS_2.8.5_4 Due to a lack of space, two pieces of UHF filters type 1 shall be integrated into a common 19" frame with maximum frame size 4U.

2.8.6. VHF Stop-Pass filter

TS_2.8.6_1 VHF Stop-Pass filter shall be a filter which consists of 1 cavity per channel.
TS_2.8.6_2 Minimal frequency separation between pass and reject frequency shall be at least 200 kHz. This is valid for both below stop and above stop frequency.
TS_2.8.6_3 The attenuation of stop frequency shall be at least 20 dB for separation 200 kHz.
TS_2.8.6_4 The insertion loss on pass frequency shall not exceed 0,65 dB in the frequency range of 118-137 MHz.
TS_2.8.6_5 The maximum continuous power shall be at least 100W.
TS_2.8.6_6 The VSWR shall be better than 1,5 over the whole range.
TS_2.8.6_7 The frequency deviation affected due to temperature change shall be lower than 200Hz/˚C.
TS_2.8.6_8 Due to a lack of space, two pieces of VHF Stop-Pass filters shall be integrated into a common 19" frame with maximum frame size 5U.

2.9. *RF Power Meter*

The RF Power Meter will provide measuring of RF parameters such as forward and reflected power, VSWR and loss between antennae and filters. The measured parameters will be presented in the RCMS application at a Site RCMS and the Central RCMS system.

TS_2.9_1 The RF Power Meter shall be housed in 19" rack enclosures.
TS_2.9_2 The RF Power Meter shall have both input and output coaxial connectors with the impedance of 50Ω, unbalanced type N female.
TS_2.9_3 The frequency range for the VHF RF Power Meter shall be within 118-137 MHz.
TS_2.9_4 The frequency range for the UHF RF Power Meter shall be within 225-400 MHz.
TS_2.9_5 The RF Power Meter shall have at least 250W power ratings.
TS_2.9_6 The level of passive intermodulation products shall be lower than -130 dBc.
TS_2.9_7 The main line return loss of the RF Power Meter shall be greater than 30dB.
TS_2.9_8 The insertion loss of the RF Power Meter shall be less than 0.1dB.
TS_2.9_9 The RF Power Meter shall be integrated into the RCMS system using serial interface over IO Extender or directly by LAN interface.
TS_2.9_10 Parameters such as forward and reflected power, VSWR and return loss shall be available in local and central RCMS system. The measuring of these parameters shall be performed at least once per seconds.
TS_2.9_11 The RF Power Meter shall be accessible in Central RCMS system in case of failure of local Site_RCMS_WS.
TS_2.9_12 The RCMS system shall activate an alarm in the case if VSWR exceeds configurable value.
TS_2.9_13 The RF Power Meter shall be powered by a battery DC power supply of 28V DC.

2.10. *Antenna Specification*

VHF antennas will be installed for the airports Poprad Tatry and Košice.

TS_2.10_1 The VHF Antenna shall be vertically erected omni-directional dipole.
TS_2.10_2 The antenna polarization shall be vertical.
TS_2.10_3 The frequency range shall be within 118-137 MHz.
TS_2.10_4 The antenna VSWR shall be less than 1.5:1.
TS_2.10_5 The antenna gain shall be at least 0dBd (ref. to the half wave dipole).
TS_2.10_6 The bandwidth shall not exceed 19 MHz.
TS_2.10_7 VHF Antenna shall guarantee endurance for wind the velocity of 150 Km/h with icing 15mm around the antenna.
TS_2.10_8 The antenna wind load shall not exceed 100N with icing 15mm around the antenna.
TS_2.10_9 The maximum RF power shall be at least 100W.
TS_2.10_10 All antennas shall have a coaxial connector with the impedance of 50Ω, unbalanced, type N female.
TS_2.10_11 All antennas shall be designed for at least 15-year-long constant outdoor operation in typical high-altitude mountain conditions. At least the following antenna handling requirements shall be met:
- Air temperature -40˚C to 80˚C;
- Air humidity up to 97%;
- Altitude 2000m above the mean sea level;
- Exposure to direct sunlight;
- Exposure to ice;
- Exposure to overvoltage from near-by lightning strikes;
- Exposure to combination of the above-mentioned conditions i.e. extreme wind and ice.

TS_2.10_12 Lightning protection solutions based on high-speed gas-tube protectors shall be provided for each delivered antenna.

TS_2.10_13 Elements necessary for installation and connecting the antennas to the radios shall be determined, specified and delivered by the Contractor based on the site survey experience.
TS_2.10_14 All antennas shall be fully installed including lightning protections, grounding kits, all necessary connectors, all necessary mounting brackets for mast fixation, cable hangers, etc.
TS_2.10_15 The antenna connectors shall be plated by materials preventing generation of intermodulation such as Optalloy or Optargen.
TS_2.10_16 The mounting flange shall be made from anticorrosive material or from hot dip galvanized steel. All screws and nuts shall be made from stainless steel.

2.11. *RF Switch*

The RF Switch will ensure switching between Main/Stby transmitters, and the antenna to receivers.

TS_2.11_1 The RF Switch shall be housed in 19" rack enclosures.
TS_2.11_2 The RF Switch shall have coaxial connectors with the impedance of 50Ω, unbalanced, type N female.
TS_2.11_3 The frequency range for the RF Switch shall be within 118-400 MHz.
TS_2.11_4 The RF Switch shall have at least 100W power ratings.
TS_2.11_5 The insertion loss of the RF Switch shall be less than 0.1dB.

2.12. *RF Lines Specification*

The connection of the antenna to radio equipment consists of 3 types of coaxial cables. First of them is the ring-shaped corrugated 1/2" coaxial cable between antenna and lighting protection. Second type between lighting protection and RF power meters (for TX) or multicouplers (for RX) is a flexible cable with low attenuation. Third type is a flexible cable for short distances between equipment installed into cabinets.

TS_2.12_1 All connectors used for all coaxial cables shall be plated by materials preventing generation of intermodulation such as Optalloy or Optargen.

2.12.2. Ring-shaped Coaxial Cable

The length of the cable is approximately 40 meters per antenna at the airport radio sites.

TS_2.12.2_1 The Antenna RF Cable shall be Foam PE-Dielectric, ring-shaped, corrugated.
TS_2.12.2_2 The declared cable attenuation shall be less than 2.61 dB/100m measured on a 150 MHz frequency under standard conditions (VSWR 1.0 and cable temperature 20˚C).
TS_2.12.2_3 The cable diameter shall be ½".
TS_2.12.2_4 The cable impedance shall be 50Ω.
TS_2.12.2_5 The Antenna RF Cable shall be terminated on both sides by coaxial connectors with the impedance of 50Ω, unbalanced, type N male.
TS_2.12.2_6 The cable Minimum Bending Radius shall be less than 70 mm for a single bend.
TS_2.12.2_7 The cable Minimum Bending Radius shall be less than 120 mm for repeated bends.
TS_2.12.2_8 The cable operating temperature shall be at least in a range from -50˚C to 85˚C.
TS_2.12.2_9 Antenna RF cable shall be fixed by coaxial cable clamps in a raster as recommended by the manufacturer.
TS_2.12.2_10 The cable shall meet flame and fire retardant requirements according to IEC 60332-1 and IEC 603323-3.C

2.12.3. Flexible Coaxial Cable 1

TS_2.12.3_1 The Flexible Coaxial Cable 1 shall be used for connection of lightning protectors to RF power meters (for TX) and multicouplers (for RX).

TS_2.12.3_2 The insulation of the flexible Cable shall be PE-Dielectric.
TS_2.12.3_3 The inner conductor shall be cooper wire, silver plated 7 x 0.75, diameter 2.25 ± 0.1 mm.
TS_2.12.3_4 The declared cable attenuation shall be less than 6.9 dB/100m measured on a 100 MHz and shall be less than 15.1 dB/100m measured on 400 MHz.
TS_2.12.3_5 The cable impedance shall be 50Ω.
TS_2.12.3_6 The Flexible Cable shall be terminated on both sides by coaxial connectors with the impedance of 50Ω, unbalanced, type N.
TS_2.12.3_7 The cable operating temperature shall be at least in a range from -20˚C to 50˚C.

2.12.4. Flexible Coaxial Cable 2

TS_2.12.4_1 The Flexible Coaxial Cable 2 shall be used for connection of equipment and devices with short distances between the equipment and where a thin cable is suitable.
TS_2.12.4_2 The insulation of the Flexible Cable shall be Foam PE-Dielectric.
TS_2.12.4_3 The inner conductor shall be cooper wire.
TS_2.12.4_4 The declared cable attenuation shall be less than 9.9 dB/100m measured on 150 MHz.
TS_2.12.4_5 The cable impedance shall be 50Ω.
TS_2.12.4_6 The Flexible Cable shall be terminated on both sides by coaxial connectors with the impedance of 50Ω, unbalanced.
TS_2.12.4_7 The cable operating temperature shall be at least in a range from -20˚C to 50˚C.

2.12.5. Lightning Protector Specification

TS_2.12.5_1 The lightning protector shall be a Gas Tube type.
TS_2.12.5_2 The return loss shall be less than 26 dB (1.1:1).
TS_2.12.5_3 The insertion loss shall be less than 0.1 dB.
TS_2.12.5_4 The SWR shall be less than 1.2.
TS_2.12.5_5 The bandwidth shall cover the frequency range of 118-400 MHz.
TS_2.12.5_6 The response time on a PE line (grounding line) shall be shorter than 100ns.
TS_2.12.5_7 The coaxial connectors shall have the impedance of 50Ω, unbalanced, type N female.
TS_2.12.5_8 The maximum operating voltage shall be at least 180V DC.
TS_2.12.5_9 The maximum power shall be at least 640W.
TS_2.12.5_10 The nominal current shall be at least 6A.
TS_2.12.5_11 The lightning protector shall be able to withstand impulse current 2.5 kA during 10-350 μs on a PE line.
TS_2.12.5_12 The lightning protector shall be able to withstand nominal discharge current 10kA during 8-20 μs on PE line.
TS_2.12.5_13 The lightning protector shall meet the requirements of EN 61643-21.
TS_2.12.5_14 The lightning protector shall be installed on the existing grounding plate panel. The Contractor shall propose a suitable lightning protector based on experience from the site survey.

2.12.6. Grounding Kit Specification

The coat of the Antenna RF Cable will be protected by outdoor grounding kits close to the antenna and close to the cable crossing to the building.

TS_2.12.6_1 The grounding kit shall be of a copper or aluminum corrugated type.
TS_2.12.6_2 The grounding kit shall be designed for a ½" coaxial cable.
TS_2.12.6_3 The contact resistance shall not exceed 1mΩ.
TS_2.12.6_4 The grounding kit shall be corrosion resistant and waterproof by IP-67.

2.12.7. Installation of RF Line

TS_2.12.7_1 Each Antenna coaxial cable shall be passed through Roxtec Wedge Kit and shall be grounded by two grounding kits (close to the antenna and in front of the entrance to the building).

TS_2.12.7_2 The Contractor shall install all described parts of the RF Line such as an RF coaxial cable, Roxtec Wedge Kit, cable clamps, grounding kits, lightning protections, flexible coaxial cable 1 and 2. The installation shall be described in detail in the site documentation.

TS_2.12.7_3 The Contractor shall provide measuring of all RF Lines and shall submit measuring protocols for each antenna.

2.13. *Cabinet Specification*

In compliance with the caution contained in the chapter 3, the rack housing of equipment at all sites displayed in the chapter 3 is just recommendation. The Contractor may offer its own structure for equipment housing for radio sites in the required quantity and with the required interconnection. Radio technology may be integrated into the same cabinet with filters and other devices if it is suitable for housing of technology.

The telecommunication cabinets will be used for housing all indoor equipment. A few types of special cabinets will be used for this purpose (The Contractor may use its own names of cabinets):

- Transmitters will be housed in special cabinets named as “TX Cabinet”;
- Receivers will be housed in special cabinets named a “RX Cabinet”;
- Transceivers will be housed in a “TRX Cabinet”;
- Filters for transmitters will be housed in a “TX Filter Cabinet”;
- Filters for receivers in ; “RX Filter Cabinet”; and
- Filters for transceivers will be housed in a “TRX Filter Cabinet”;

2.13.1. General requirement for Cabinets

Unless stated otherwise, the general requirements must be applied to all cabinets.

TS_2.13.1_1 All cabinets shall have all necessary cabling for connection of all equipment. Audio cables between radios and MDF (LSA Krone), transmitters and receivers. LAN cables and patch-cords between LAN switches and other equipment. Data cables, RF cables, grounding cables etc.

TS_2.13.1_2 Audio interfaces shall be wired to the Main Distribution Frame (MDF). The Contractor shall install **original KRONE type LSA Plus standard in all cabinets!**

TS_2.13.1_3 Cables connected to the MDF shall be in the **form of solid wire conductors!** Stranded wires are not allowed due to poor adhesion in LSA connectors.

TS_2.13.1_4 All cables shall be labelled on both ends. Technical documentation shall contain schematic diagrams with labelled cables.

TS_2.13.1_5 All cabinets shall have a static illumination lamp at the top of the cabinet and a removable lamp with clip mechanism for fixing everywhere in the cabinet. The illuminating lamp shall not use pulsed power supply due to interferences.

TS_2.13.1_6 The front and back doors of TX/RX/TRX cabinets shall allow ventilation of radio equipment by perforated holes on the doors.

TS_2.13.1_7 The cabinet front unused spaces shall be fitted with blank 19“panels.

TS_2.13.1_8 The line input on transmitters (AF input) shall be designed for direct connection to communication lines 600Ω balanced at a nominal level between -10dBm and +10dBm) adjustable by 1dBm steps.

TS_2.13.1_9 The line output on receivers (AF output) shall be designed for a direct connection to communication lines 600Ω balanced at a nominal level between -10dBm and +10dBm) adjustable by 1dBm steps.

Note: LAN switches and Galvanic Isolators are not a subject of delivery. The Contractor will install these equipment supplied by LPS.

2.13.2. The Power Supply for TX/RX/TRX Cabinets

The TX/RX/TRX cabinets will be powered by the existing AC and DC power sources. Prior to installation of new system, the LPS will prepare the AC and DC power supply at all sites in line with Contractor's requirements specified in "Requirements on Power Supply" in accordance with the part 9.7 of this Technical Specification.

TS_2.13.2_1 The Contractor shall specify type of power feeders for AC and DC power supply for each radio site based on the calculation of consumption.

TS_2.13.2_2 All cabinets shall have terminals to enable connection of external AC and DC power feeders. The cabling method (top/bottom) is specified in Chapter 3.

TS_2.13.2_3 All equipment shall be powered by the AC and DC power supply. Redundant equipment A shall be powered from AC-A and DC-A feeders and equipment B shall be powered from AC-B and DC-B feeders.

TS_2.13.2_4 The AC and DC power cables for equipment shall be installed in a cabinet. All equipment shall be able to provide changeover from AC to DC and reverse (after re-establishing an AC power source).

TS_2.13.2_5 The Contractor shall install AC and DC power cables for LAN switches and Galvanic Isolators. Specification of power cords will be sent after the request to LPS.

TS_2.13.2_6 Performance of the radios shall not be degraded in the course of unlimited periods with the supply voltage variation as specified.

TS_2.13.2_7 The measuring of power supply voltages AC-A/B and DC-A/B in all powered cabinets shall be integrated in the RCMS.

TS_2.13.2_8 In the case that AC fails or the monitored DC power supply parameters drop below a system programmable threshold measured by the RCMS, a visual and sound alarm shall be triggered by the system until the fault is corrected.

2.13.3. Cabinets for ATCC

TS_2.13.3_1 The TX1, TX2 and TX Filter cabinets shall be equipped with:

- 40 pcs of transmitters,
- the Site_RCMS_WS,
- rack mounted display, keyboard and a touchpad with high 1U,
- place 2U for a 24-port LAN switches (1U slot in TX1 and next 1U slot in TX2),
- place 1U for a 24-port LAN switch for RF power meters,
- at least 5 pcs of cable management panels for LAN switches and Galvanic isolators,
- place 4U for 4 pcs of 16 port galvanic isolators (2pcs in TX1 and 2pcs in TX2),
- 2 pcs of IO Extenders (1pcs in TX1 and 1pcs in TX2),
- 16 pcs of VHF Band-Pass filter type 1,
- 4 pcs of UHF Band-Pass filter type 1,
- 20 pcs of RF power meters,
- 20 pcs of double circulators,
- 20 pcs of RF switch

- all necessary RF, audio, signalization, data and power cables,
- AC-A, AC-B, DC-A and DC-B power distribution panels,
- 1 sliding shelf with a carrying load for placing a pair of transceivers and
- 1 drawer box with the size of at least 3U for documentation and tools.

TS_2.13.3_2 The RX Cabinet and RX1 and RX2 Filter cabinets shall be equipped with:

- 40 pcs of receivers,
- 2 pcs of 16-port VHF multicouplers,
- 2 pcs of 8-port UHF multicouplers,
- 32 pcs of VHF Band-Pass filters type 2,
- 8 pcs of UHF Band-Pass filters type 2,
- 2 slots 1U for a 24-port LAN switches A and B,
- at least 3 pcs of cable management panels between LAN switches and Galvanic isolators,
- place 4U for 4 pcs of 16 port galvanic isolators (2pcs for A receivers and 2pcs for B receivers),
- 1 pcs of IO Extenders,
- all necessary RF, audio, signalization, data and power cables,
- AC-A, AC-B, DC-A and DC-B power distribution panels and
- 2 sliding shelfs with a carrying load for placing a pair of filters.

2.13.4. Cabinets for Poprad-Tatry

TS_2.13.4_1 The TRX and TRX filter cabinet for Poprad-Tatry shall be equipped with:

- 10 pcs of VHF transceivers or 10 pcs of VHF transmitters and receivers,
- the Site_RCMS_WS,
- rack mounted display, keyboard and a touchpad with high 1U,
- place 2U for a 24-port LAN switches A and B,
- at least 2 pcs of cable management panels for LAN switches and Galvanic isolators,
- place 2U for 2 pcs of 16 port galvanic isolators A and B,
- 1 pcs of IO Extenders,
- 1 pcs of 8-port VHF multicoupler,
- 6 pcs of VHF Band-Pass filter type 1 for transmitters,
- 6 pcs of VHF Band-Pass filter type 1 for receivers,
- 4 pcs of VHF Stop-Pass filter for receivers,
- 2 pcs of RF power meters,
- 5 pcs of double circulators,
- 5 pcs of RF switch for TX + one switch for antenna
- 5 pcs of RF switch/coupler/hybrid for receivers,
- all necessary RF, audio, signalization, data and power cables,
- AC-A, AC-B, DC-A and DC-B power distribution panels,
- 1 sliding shelf with a carrying load for placing a pair of transceivers and
- 1 drawer box with the size of at least 3U for documentation and tools.

2.13.5. Cabinet for Košice

TS_2.13.5_1 The TX-RX and TX-RX filter cabinet for Košice shall be equipped with:

- 12 pcs of VHF transceivers or 10 pcs of VHF transmitters and receivers,
- the Site_RCMS_WS,
- rack mounted display, keyboard and a touchpad with high 1U,
- place 2U for a 24-port LAN switches A and B,
- at least 2 pcs of cable management panels for LAN switches and Galvanic isolators,
- place 2U for a 2 pcs of 16 port galvanic isolators A and B,
- 1 pcs of IO Extenders,

- 2 pcs of 8-port VHF multicouplers,
- 6 pcs of VHF Band-Pass filter type 2 for transmitters,
- 6 pcs of VHF Band-Pass filter type 2 for receivers,
- 2 pcs of RF power meters,
- 6 pcs of double circulators,
- 6 pcs of RF switch,
- 6 pcs of RF switch/coupler/hybrid for receivers,
- all necessary RF, audio, signalization, data and power cables and
- AC-A, AC-B, DC-A and DC-B power distribution panels.

3. SYSTEM CONFIGURATION

The defined exact receiving and transmitting frequencies installed at all radio sites may be changed by LPS in the implementation phase. LPS will confirm exact frequencies prior to the factory acceptance.

Attention:
The interconnections of TX and RX equipment displayed on the figures in this chapter are mandatory. Rack housing of equipment at all sites displayed in this chapter is just recommendation. The Contractor may offer its own structure for equipment housing in the required quantity and with the required interconnection. Radio technology with filters and other devices may be integrated into the common cabinet if it is a better solution in terms of the proposed technology.

3.1. *General requirements*

TS_3.1_1 The Contractor shall perform full installation of the new radio technology including cabinets, cabling, measuring etc. The System will be delivered as fully operational.

TS_3.1_2 New radio technology shall be installed in equipment rooms where the current system are installed. The positioning of new equipment will be agreed during the site survey.

TS_3.1_3 The radio equipment working in the Main/Standby configuration shall be capable of automatic switchover in the case of any failure based on an alarm signal derived from the inbuilt test information.

TS_3.1_4 Each transmitter radio site shall be equipped with two pieces of hand microphones and two pieces of headsets equipped with a PTT switch. Receiver radio site shall be equipped with two pieces of headsets.

TS_3.1_5 The directional selection pattern of headsets and microphones should be of a “cardioid” type in order to limit the environment noise.

TS_3.1_6 The cable of headsets and microphones shall be of a spiral type with a length of 1.5 – 2 m (stretched).

TS_3.1_7 Transmitters shall be connected to antennas using RF Switch, doubled circulators, filters, combiner/star point, RF power meters, lightning protection and antennae coaxial cable.

TS_3.1_8 Transmitters shall control the RF Switch for switching the antenna to an active transmitter. If a standby transmitter becomes active, the RF Switch shall switch to this transmitter immediately.

3.2. *ATCC radio system*

Backup radio site for **ATC** Centre in Bratislava is designed such backup radio site dedicated for en-route communication in FIR of the Slovak Republic. This means, that radio system shall include all frequencies used for en-route communication. In overall 16 VHF and 4 UHF frequencies.

Backup radio system consists of transmitter radio site located directly at ATCC operational building and receiver radio site located at JSRLP building by Figure 5 below:

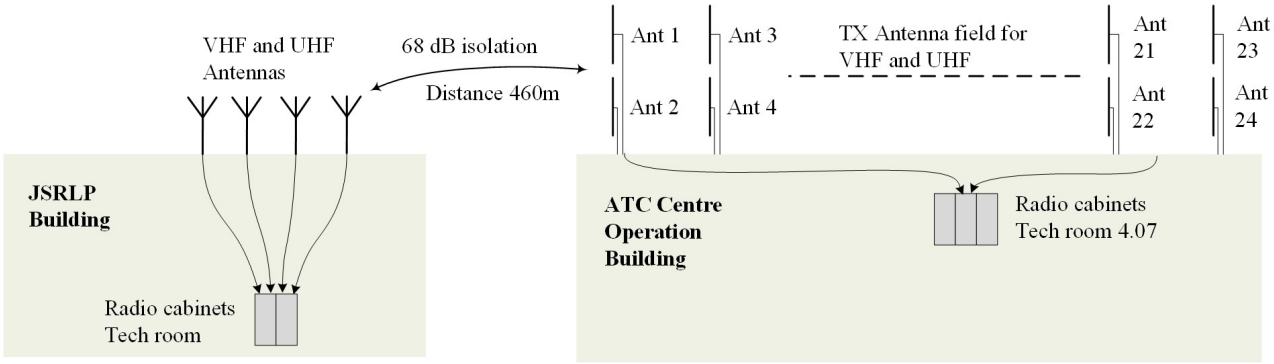

Figure 5 – ATCC antenna location

The distance between TX and RX site is approximately 460m, which corresponds to the isolation between the RX and TX antennas 68dB. Therefore, the Band-Pass filters type 2 can be used due to sufficient antenna isolation at receiver site JSRLP.

Backup RX and TX radio site for ATC Centre will use existing VHF and UHF antennas, lightning protections and ring-shaped corrugated 1/2" coaxial cables between these antennas and lightning protections inside the building.

TS_3.2_1 The Contractor shall deliver and install RF cables between lightning protections and radio technology.

TS_3.2_2 The VHF and UHF backup system for ATCC shall be designed as separated RX and TX sites for 16 VHF frequencies and 4 UHF frequencies both in the Main/Stby mode.

TS_3.2_3 The Contractor shall put into operation the radio equipment and ensure its full functionality for the following frequencies and in the quantity as specified in the table below:

Nr.	Frequency	Frequency	Transmitter	Receiver	Purpose

		Raster	configuration	configuration	
1	127,425	25 kHz	Main/Stby	Main/Stby	H Sector
2	135,965	8,33 kHz	Main/Stby	Main/Stby	W Sector
3	132,355	8,33 kHz	Main/Stby	Main/Stby	U Sector
4	125,965	8,33 kHz	Main/Stby	Main/Stby	M Sector
5	134,475	25 kHz	Main/Stby	Main/Stby	L Sector
6	132,735	8,33 kHz	Main/Stby	Main/Stby	E Sector
7	129,275	25 kHz	Main/Stby	Main/Stby	Alternate 1
8	122,230	8,33 kHz	Main/Stby	Main/Stby	Alternate 2
9	126,475	25 kHz	Main/Stby	Main/Stby	Alternate 3
10	124,300	25 kHz	Main/Stby	Main/Stby	FIC
11	123,100	25 kHz	Main/Stby	Main/Stby	SAR
12	125,000	25 kHz	Main/Stby	Main/Stby	Military
13	124,000	25 kHz	Main/Stby	Main/Stby	Military Alternate
14	121,500	25 kHz	Main/Stby	Main/Stby	Emergency
15	130,050	25 kHz	Main/Stby	Main/Stby	TECH
16	131,000	25 kHz	Main/Stby	Main/Stby	Spare
17	279,450	25 kHz	Main/Stby	Main/Stby	ACC
18	340,125	25 kHz	Main/Stby	Main/Stby	MIL
19	280,300	25 kHz	Main/Stby	Main/Stby	Alternate
20	243,000	25 kHz	Main/Stby	Main/Stby	Emergency
quantity TX and RX			40	40	

TS_3.2_4 ATCC transmitters and receivers for one frequency channel shall use equipment and connection by the Figure 6 below:

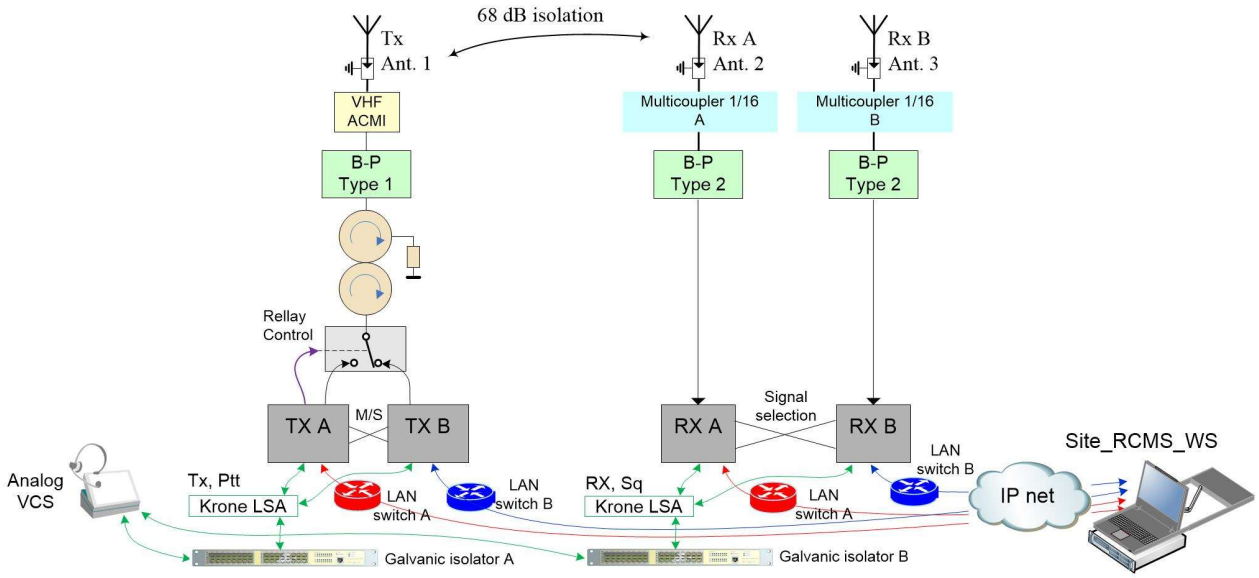

Figure 6 – ATCC radio channel connection

Note:
Analog VCS, LAN switches and Galvanic Isolators are not a subject of delivery.

TS_3.2_5 The receivers working in parallel A/B configuration shall be capable of automatic switchover of audio signal to the MDF (Krone LSA) in the case of any failure. Additionally, switchover shall prevent the degradation of good useful signal from one receiver by weak and noisy signal from second receiver in case of some problem with antenna (high VSWR). The switchover can be based on the evaluation of RSSI and SNR during continuous measuring.

TS_3.2_6 ATCC receiver site shall use RF scheme by the Figure 7 below:

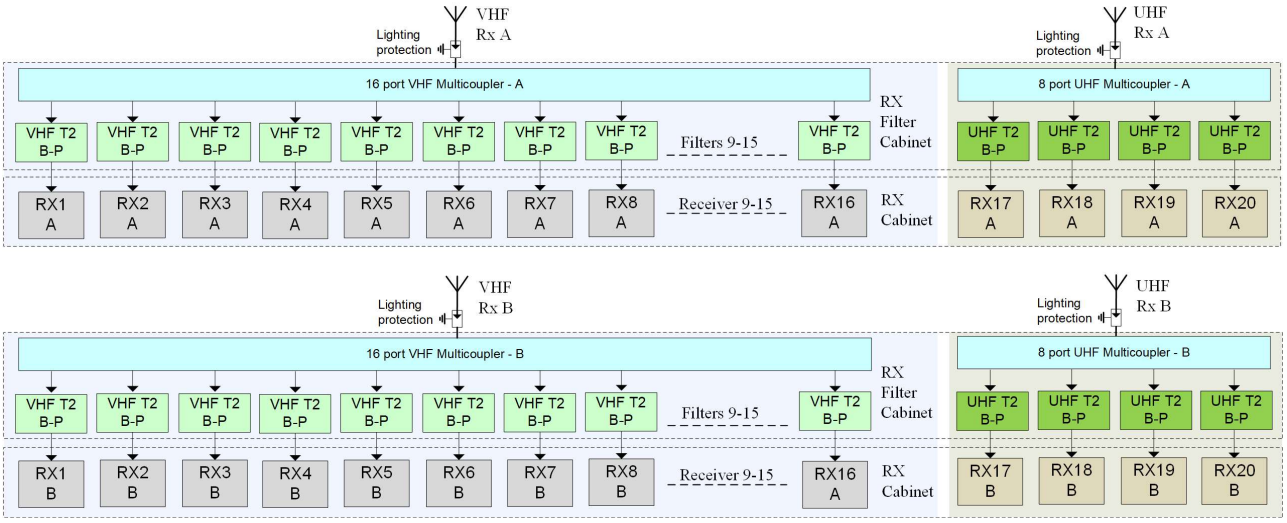

Figure 7 – ATCC receiver site RF scheme

TS_3.2_7 ATCC transmitters site shall use RF scheme by the Figure 8 below:

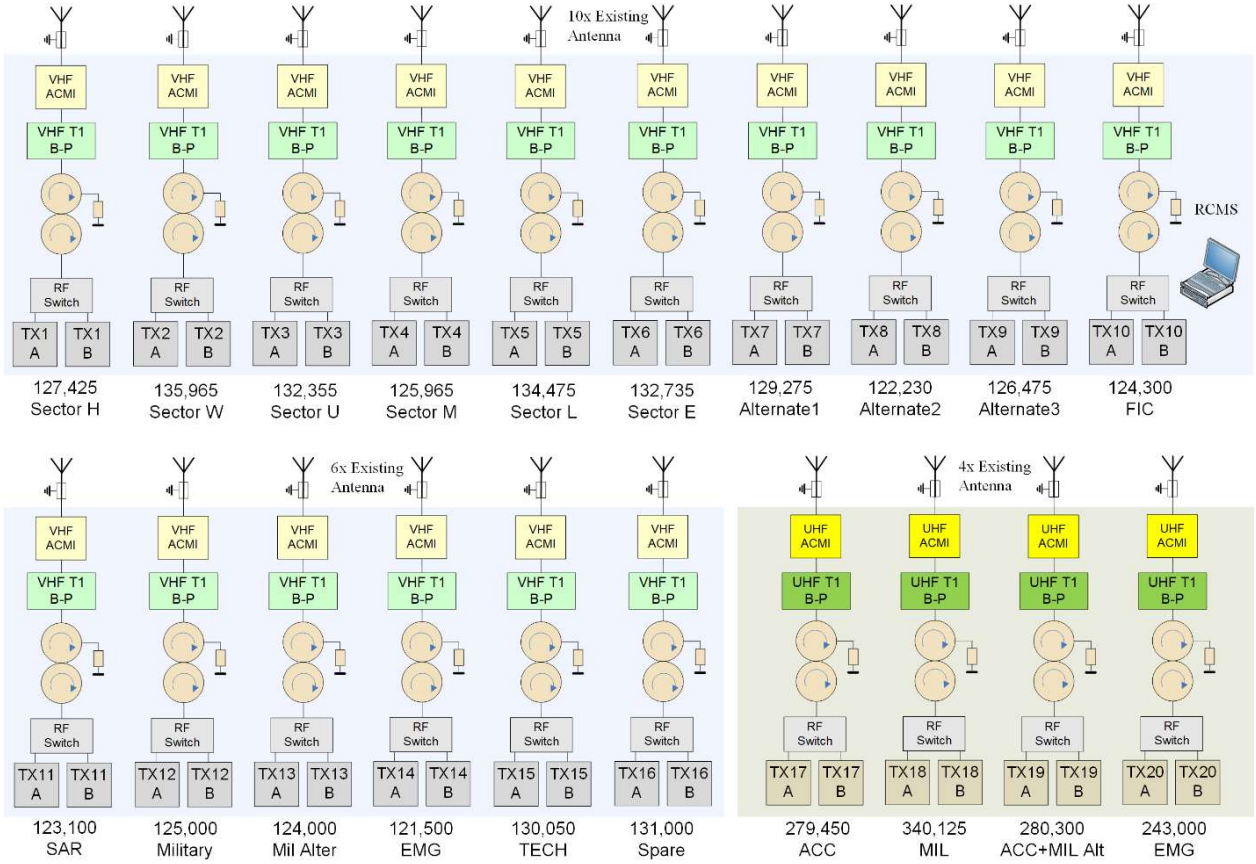

Figure 8 – ATCC transmitter RF scheme

TS_3.2_8 The Contractor shall deliver, install and put into operation the equipment/devices and ensure its full functionality in the quantity as specified in the table below:

Equipment	TX site	RX site	Quantity
Transmitter – VHF (TX1-16)	32	-	32
Transmitter – UHF (TX17-20)	8	-	8
Receiver – VHF (RX1-16)	-	32	32
Receiver – UHF (RX17-20)	-	8	8
RF switch for TX	20	-	20
Double circulator - VHF	16	-	16
Double circulator - UHF	4	-	4
VHF Band-Pass Filter type 1	16	-	16
VHF Band-Pass Filter type 2	-	32	32
UHF Band-Pass Filter type 1	4	-	4
UHF Band-Pass Filter type 2	-	8	8
VHF RF power meter (ACMI)	16	-	16
UHF RF power meter (ACMI)	4	-	4
VHF 16-port Multicoupler	-	2	2
UHF 8-port Multicoupler	-	2	2
IO Extender	2	1	3

TX Cabinet	2	-	2
RX Cabinet	-	1	1
TX Filter Cabinet	1	-	1
RX Filter Cabinet	-	2	2
Site RCMS system (HW+SW)	1	-	1

If VHF multicouplers will be offered, the circulators will be a part of the multicoupler.

TS_3.2_9 All equipment for the ATCC transmitter site shall be housed in not more than 3 cabinets **60 cm wide and 80-100 cm deep** and **48U high**.

TS_3.2_10 All equipment for the ATCC receiver site shall be housed in not more than 3 cabinets **60 cm wide and 80-100 cm deep** and **48U high**.

The Figure 9 displaying a recommended position of equipment in cabinets for ATCC transmitter site:

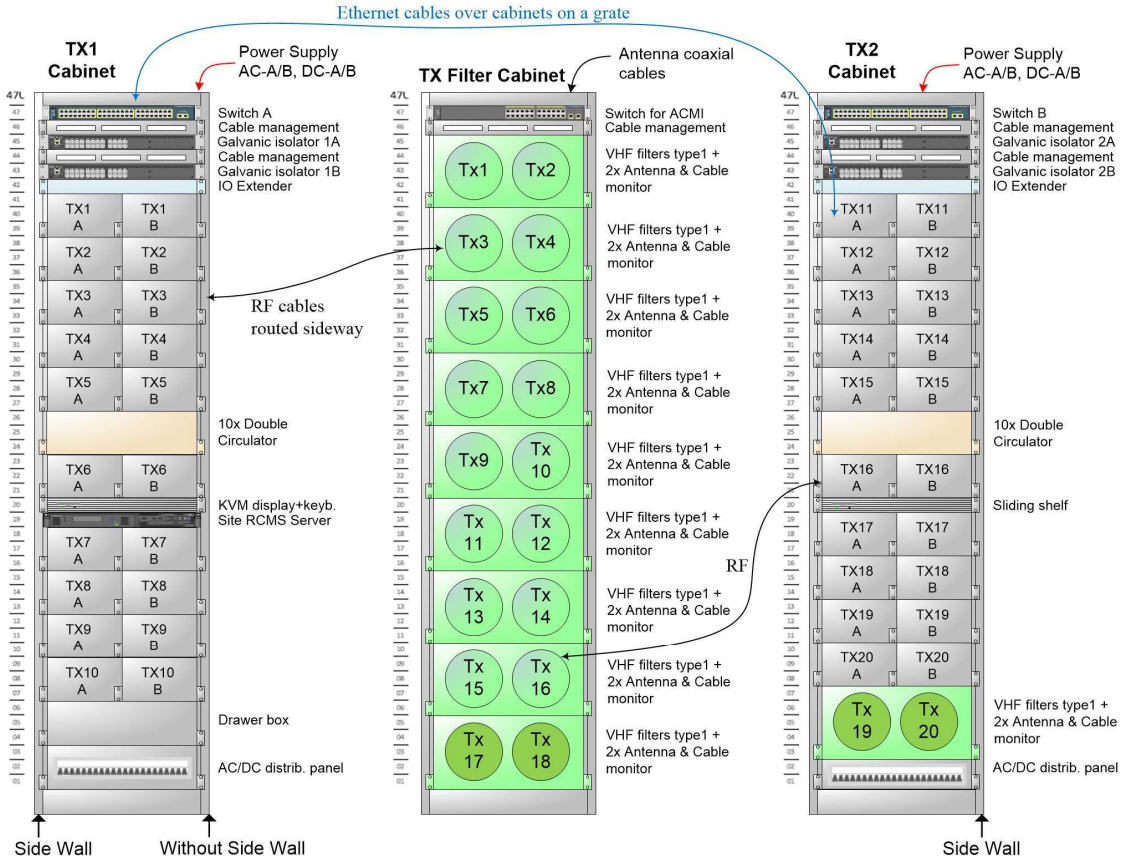

Figure 9 – ATCC transmitter and filter cabinets

TS_3.2_11 The cabinets on transmitter site shall be installed side by side without inner side walls. RF cables may be routed sideway.

TS_3.2_12 Antenna coaxial cables, Ethernet cables and power cords for AC-A, AC-B, DC-A and DC-B shall be routed from the **top** of cabinets.

The Figure 10 displaying a recommended position of equipment in cabinets for ATCC receiver site:

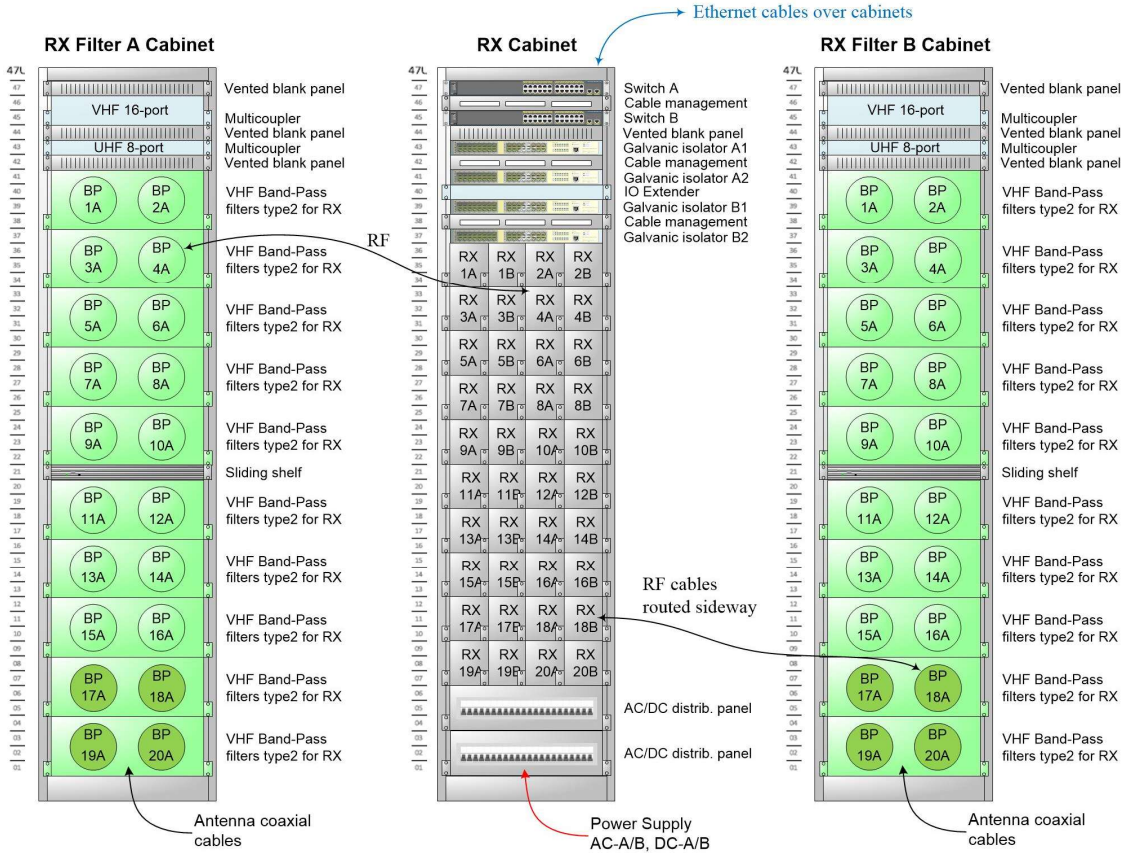

Figure 10 – ATCC receiver and filter cabinets

TS_3.2_13 The cabinets on receiver site shall be installed side by side without inner side walls. RF cables may be routed sideway.

TS_3.2_14 Ethernet cables shall be routed from **top** of cabinets.

TS_3.2_15 Antenna coaxial cables and power cords for AC-A, AC-B, DC-A and DC-B shall be routed from the **bottom** of cabinets.

3.3. *Backup radio system for the Airport Poprad-Tatry*

Backup radio site for the **Airport Poprad-Tatry** will be located directly at operation building below the Control Tower. Transmitters and receivers will use separate antennas on the roof of the operational building by Figure 11 below:

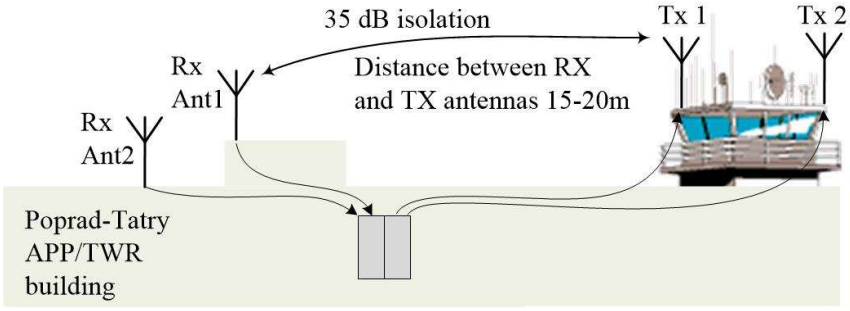

Figure 11 – Poprad-Tatry antenna location

The backup radio system is quite problematic in terms of frequency compatibility due to small distance between receivers and transmitters antennas and close frequency spacing between the frequencies used by Control Tower.

The distance between TX and RX antennas is approximately 15-20 m, theoretically it corresponds to the isolation 35 dB between RX and TX antennas. To increase the isolation, it is necessary to use the cascade of Band-Pass filters type 1 together with Band-Stop filter for exact frequency. These aspects shall be described in the supplied document Colocation analysis with calculation of intermodulation products. One spare Band-pass filter for TX and one for RX will be usable for elimination of IM products if needed. Contractor may recommend additional filters based on analysis.

TS_3.3_1 The VHF backup radio system for the Airport Košice shall be designed for 6 VHF frequencies. Contractor may offer transceivers or separate transmitters with separate receivers in the Main/Stby mode.

TS_3.3_2 The Contractor shall install 2 pcs of VHF antenna specified in chapter 2.10. together with RF lines specified in chapter 2.12. New antennas will be used for receivers. Technical details how to trace RF lines and install mounting flange for antenna shall be agreed during site survey.

TS_3.3_3 The Contractor shall put into operation the radio equipment and ensure its full functionality for the following frequencies and in the quantity as specified in the table below:

Frequency	Frequency Raster	Transceiver configuration	Purpose
118,625	25 kHz	Main/Stby	TWR Alternate 1
121,350	25 kHz	Main/Stby	TWR Main
121,705	8,33 kHz	Main/Stby	Taxiway
121,500	8,33 kHz	Main/Stby	EMG
118,950	8,33 kHz	Main/Stby	TWR Alternate 2
130,050	25 kHz	Main/Stby	Tech
Quantity TRX		10	

TS_3.3_4 Radio at the airport Poprad-Tatry shall use equipment and connection by the figure 12 below. Due to lack of space, the band pass filters shall be shared for both receivers.

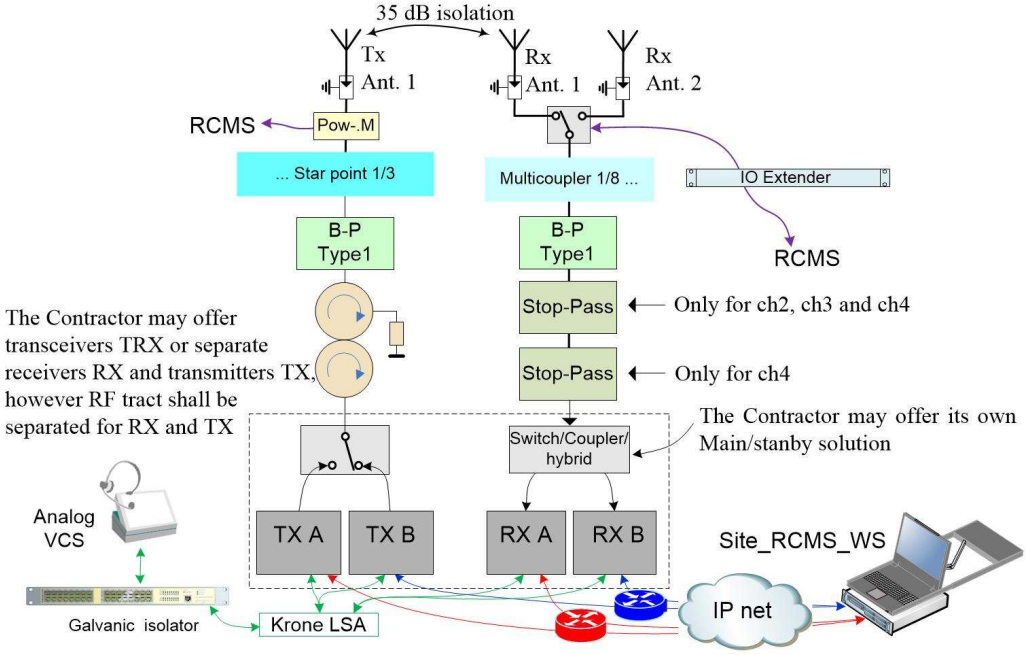

Figure 12 – Poprad-Tatry radio channel connection

Note:
Analog VCS, LAN switches and Galvanic Isolators are not a subject of delivery.

TS_3.3_5 Interconnection of receiver equipment at the site Poprad-Tatry shall be designed in line with the Figure13 below:

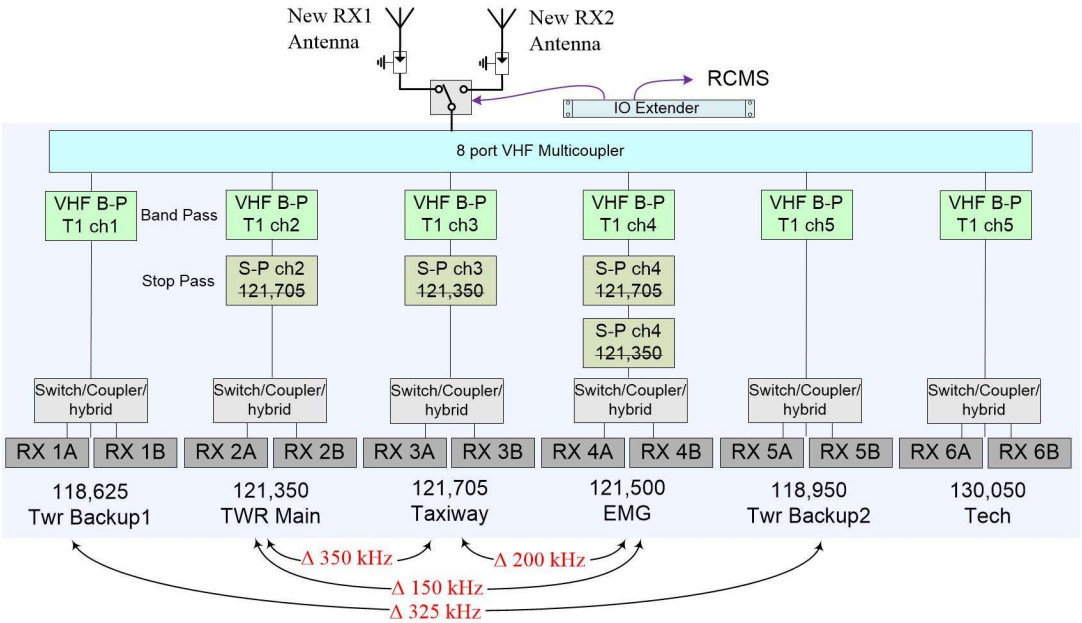

Figure 13 – Poprad-Tatry receiver RF scheme

TS_3.3_6 The overall attenuation of cascade for Band-Pass filters type 1 and Band-Stop filter shall be maximally 3,0 dB.

TS_3.3_7 The overall attenuation of cascade for Band-Pass filters type 1 and two Band-Stop filters shall be maximally 4,5 dB.

TS_3.3_8 The RCMS system shall allows the switching between RX1 and RX2 antenna for receivers RF tract.

TS_3.3_9 Interconnection of transmitter equipment at the site Poprad-Tatry shall be designed in line with the Figure 14 below. The Contractor should deliver 4-channel and 2-channel multicoupler or two 3-channels multicouplers based on IM calculation:

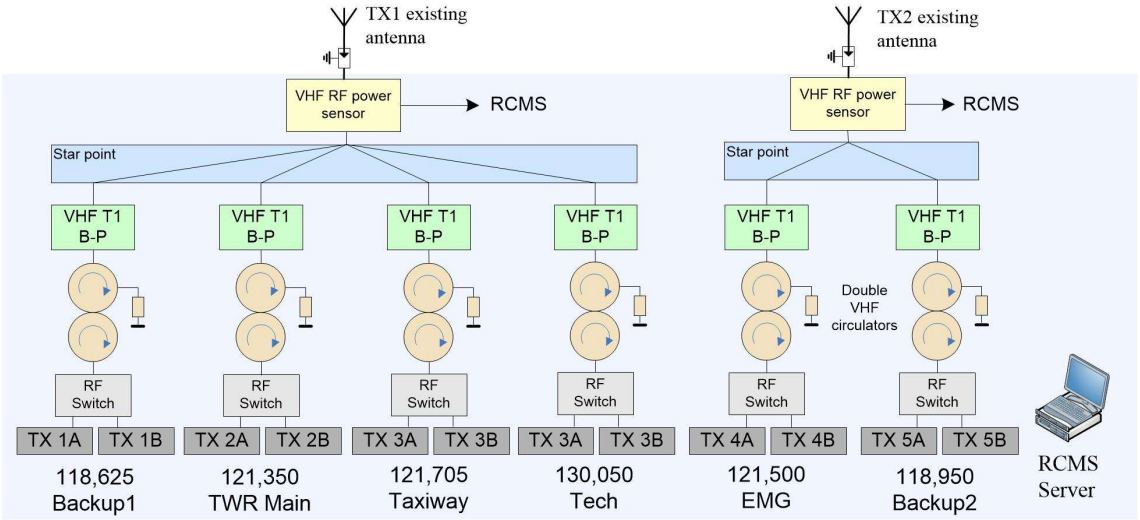

Figure 14 – Poprad-Tatry transmitter RF scheme

TS_3.3_10 The Contractor shall deliver, install and put into operation the equipment/device and ensure its full functionality in the quantity as specified in the table below:

Equipment	Quantity
VHF Transceiver	12
Antenna with RF lines	2
RF switch for transmitters and antenna	6
Switch/Coupler/Hybrid for receivers	6
Double circulator - VHF	6
VHF Band-Pass filter type 1	12
VHF Stop-Pass filter	4
4-port Starpoint	1
3-port Starpoint	2
2-port Starpoint	1
VHF RF power meter	2
VHF 8-port Multicoupler	1
IO Extender	1
TRX Cabinet	1
TRX Filter Cabinet	1
Site RCMS system (HW+SW)	1

If VHF multicouplers will be offered, the starpoint and circulators will be a part of the multicoupler.

The Figure 15 displaying a recommended position of equipment in cabinets for the site Poprad-Tatry:

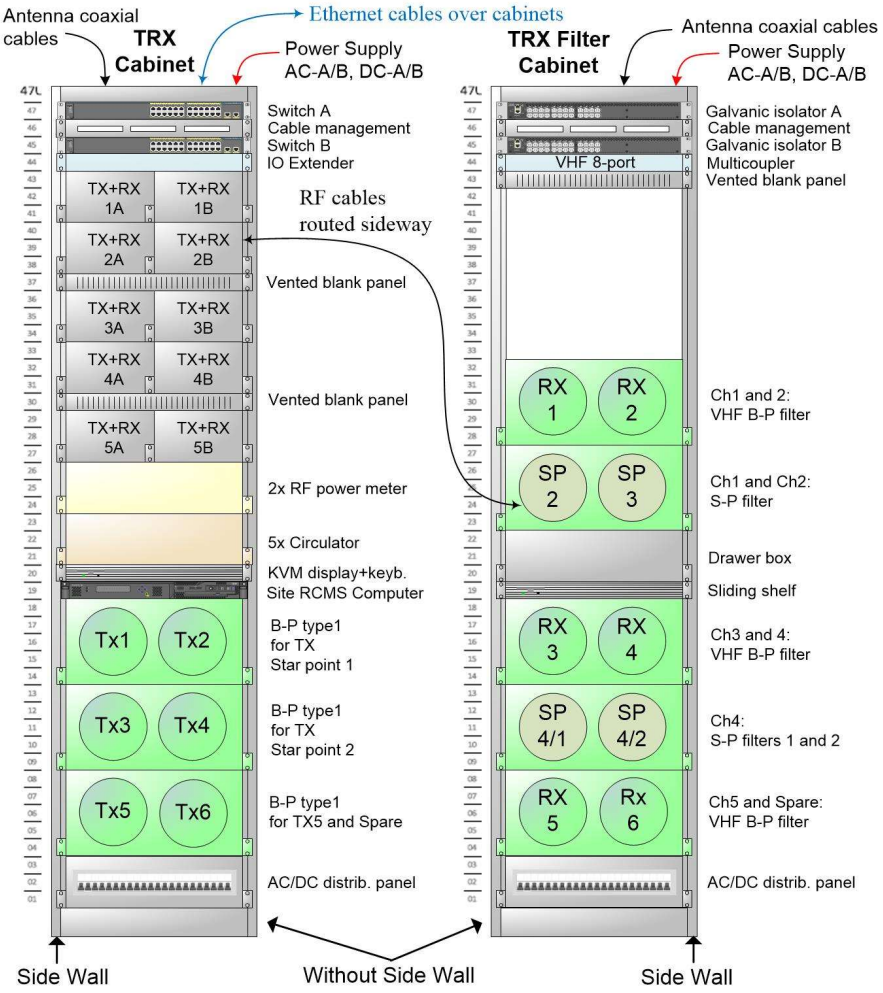

Figure 15 – Poprad-Tatry cabinets

TS_3.3_11 All equipment for Poprad-Tatry site shall be housed in not more than 2 cabinets **60 cm wide 80-100 cm deep** and **48U high**.

TS_3.3_12 Both cabinets shall be installed side by side without inner side walls. RF cables may be routed sideway.

TS_3.3_13 Antenna coaxial cables, Ethernet cables and power cords for AC-A, AC-B, DC-A and DC-B shall be routed from the **top** of cabinets.

3.4. *Košice radio system*

Backup radio site for the **Airport Košice** will be located directly at operation building below the Control Tower. Transmitters will use antennas on the roof of the Control Tower and receivers will use antennas on the roof of the operational building below Tower by Figure 16 below:

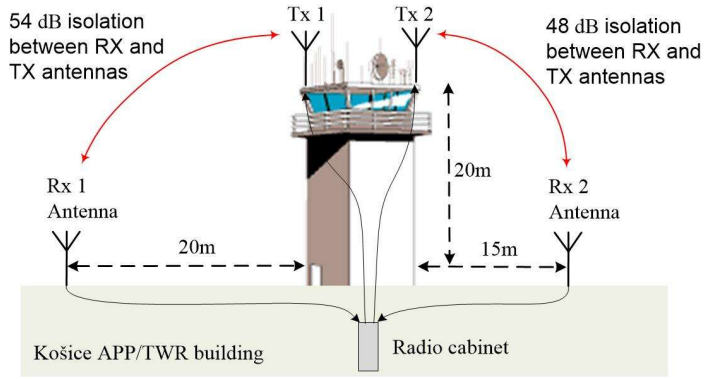

Figure 16 – Košice antenna location

The backup radio system is quite problematic due to lack of space (just for one cabinet) and due to small distance between receivers and transmitters antennas and close frequency spacing between the frequencies used by Control Tower.

The isolation between TX and RX antennas is theoretically 48 and 54 dB. To increase the interference immunity, it is necessary to use Band-Pass filters type 2 for the receivers and for the transmitters.

TS_3.4_1 The VHF backup radio system for the Airport Košice shall be designed for 6 VHF frequencies. Contractor may offer transceivers or separate transmitters with separate receivers in the Main/Stby mode.

TS_3.4_2 The Contractor shall install 2 pcs of VHF antenna specified in chapter 2.10. together with RF lines specified in chapter 2.12. New antennas will be used for receivers. Technical details how to trace RF lines and install mounting flange for antenna shall be agreed during site survey.

TS_3.4_3 The Contractor shall put into operation the radio equipment and ensure its full functionality for the following frequencies and in the quantity as specified in the table below:

Frequency	Frequency Raster	Transceiver configuration	Purpose
119,850	25 kHz	Main/Stby	APP Alternate
120,400	25 kHz	Main/Stby	TWR Main
121,705	8,33 kHz	Main/Stby	Taxiway
121,500	25 kHz	Main/Stby	EMG
129,350	25 kHz	Main/Stby	APP Main
118,900	25 kHz	Main/Stby	TWR Alternate
Quantity TRX		12	

TS_3.4_4 Radio channel at the airport Košice shall use equipment and connection by the Figure 17 below. Due to lack of space, the band pass filters shall be shared for both receivers.

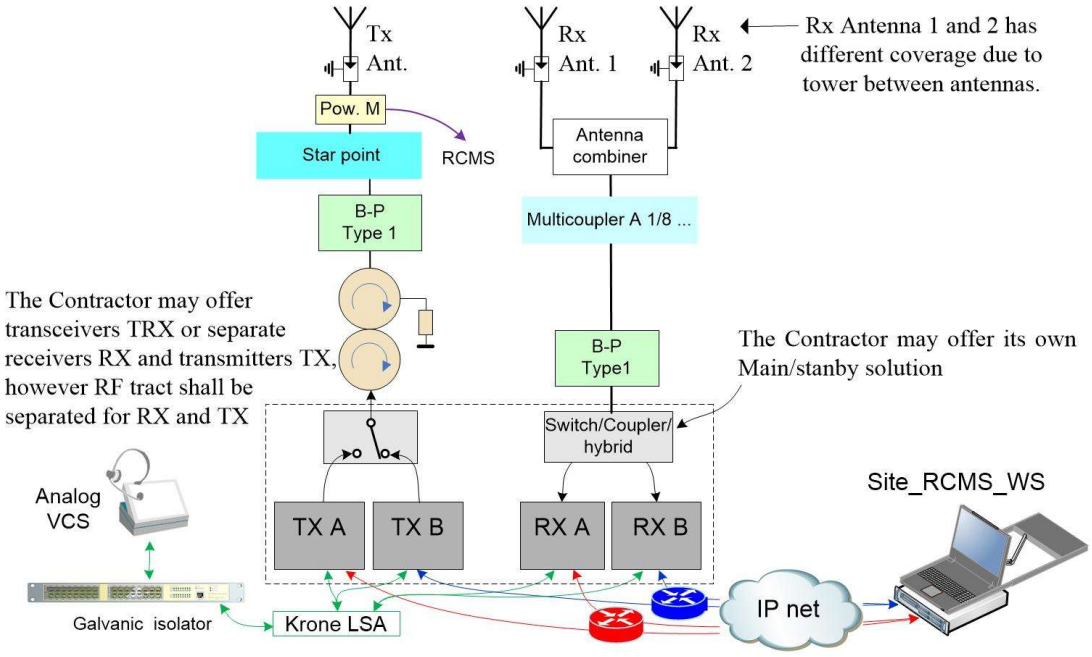

Figure 17 – Košice radio channel connection

Note:
Analog VCS, LAN switches and Galvanic Isolators are not a subject of delivery.

TS_3.4_5 The overall attenuation of all RF equipment in receiver path shall be maximally 5 dB.

TS_3.4_6 Interconnection of receiver equipment at the site Košice shall be designed in line with the Figure 18 below:

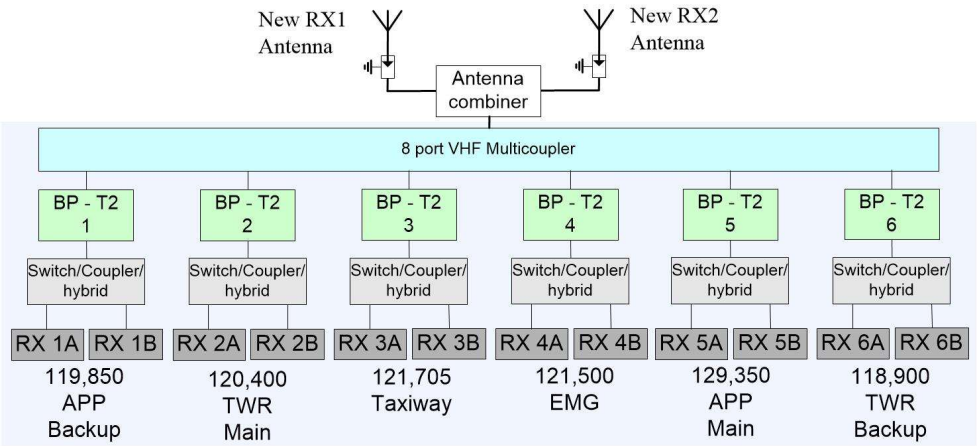

Figure 18 – Košice receiver RF scheme

TS_3.4_7 Interconnection of transmitter equipment at the site Košice shall be designed in line with the Figure 19 below. The Contractor should deliver 4-channel and 2-channel multicoupler or two 3-channels multicouplers based on IM calculation.

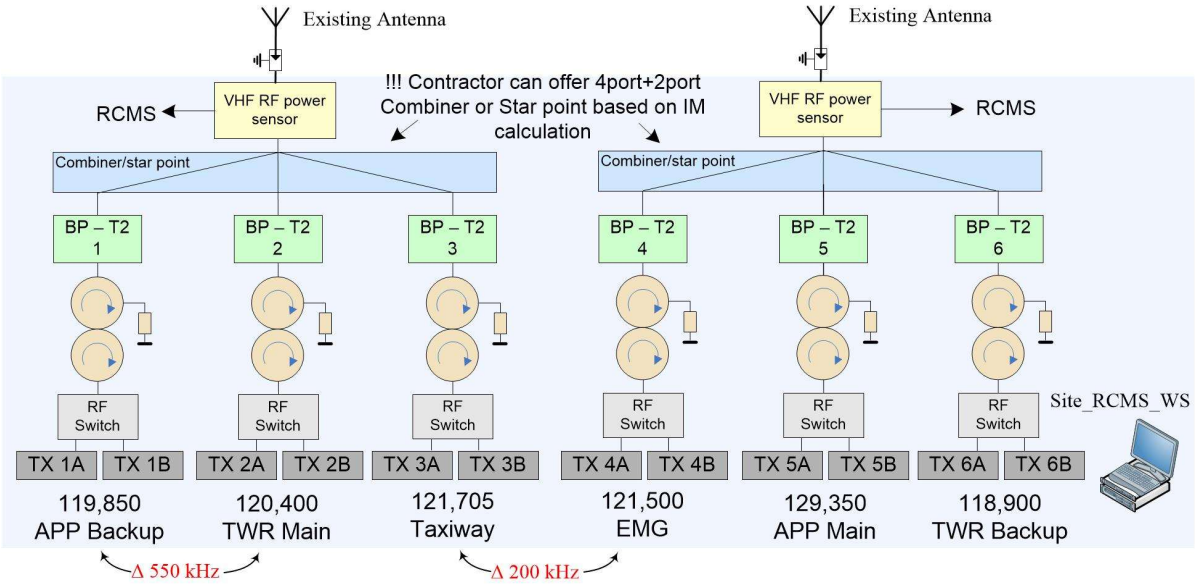

Figure 19 – Košice transmitter RF scheme

TS_3.4_8 The Contractor shall deliver, install and put into operation the equipment/device and ensure its full functionality in the quantity as specified in the table below:

Equipment	Quantity
VHF Transceiver	12
Antenna with RF lines	2
Antenna combiner	1
RF switch for transmitters	6
Switch/Coupler/Hybrid for receivers	6
Double circulator - VHF	6
VHF Band-Pass filter type 2	12
4-port Starpoint	1
3-port Starpoint	2
2-port Starpoint	1
VHF RF power meter	2
VHF 8-port Multicoupler	1
IO Extender	1
TRX Cabinet	1
Site RCMS system (HW+SW)	1

If VHF multicouplers will be offered, the starpoint and circulators will be a part of the multicoupler.

The Figure 20 displaying a recommended position of equipment in cabinet for the site Košice:

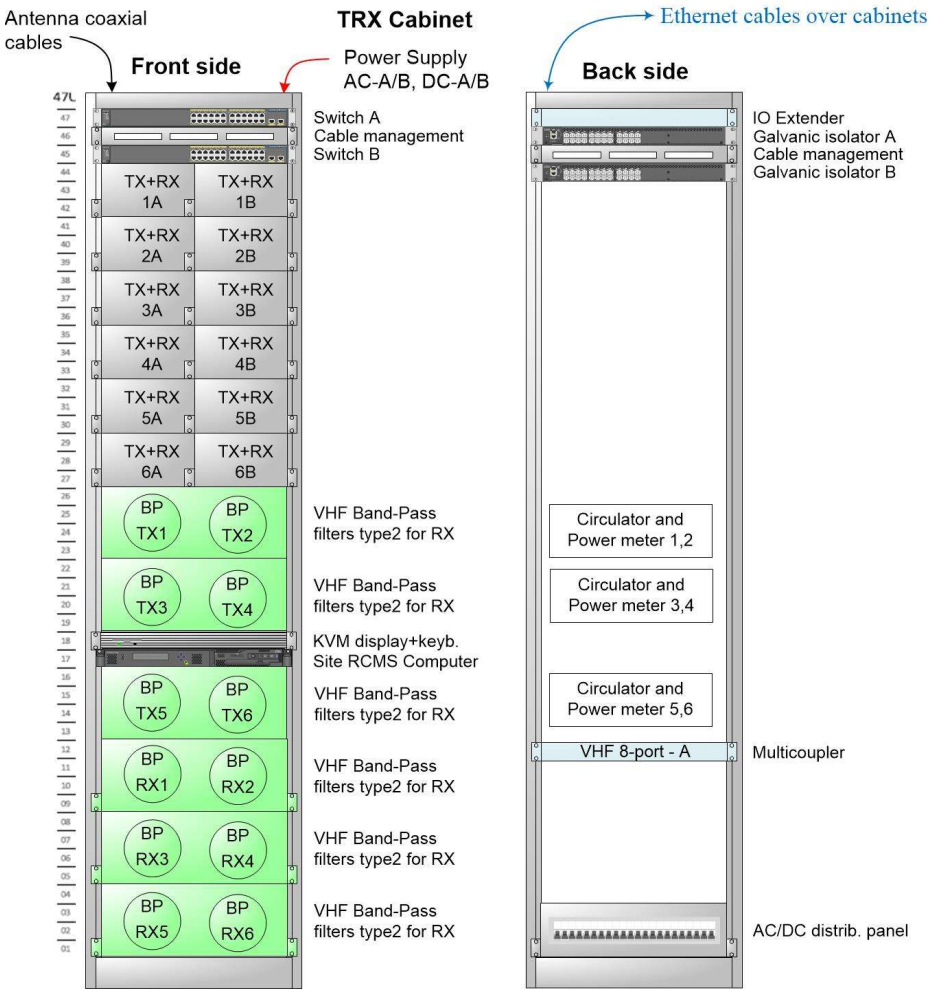

Figure 20 – Košice TRX cabinet

TS_3.4_9 All equipment for site Košice shall be housed in one cabinet **60 cm wide** and **up to 100 cm deep** and **up to 52U high**.

TS_3.4_10 Antenna coaxial cables, Ethernet cables and power cords for AC-A, AC-B, DC-A and DC-B shall be routed from the **top** of cabinets.

4. REMOTE CONTROL AND MONITORING SYSTEM

4.1. *RCMS topology*

Remote Control and Monitoring System (RCMS) will be installed at ATC Centre Bratislava, at the Airport Poprad-Tatry and Košice in line with the Figure 21. The RCMS system installed at a local radio site will be called a Site RCMS. The Central RCMS will be installed in the Technical Coordination Centre which is located in the Operational Building of ATC Centre. The computers, radios and other equipment constituting the RCMS will be connected using a network operated by LPS. Dedicated VLAN (TCPIP_v4 or v6) will be established for the RCMS.

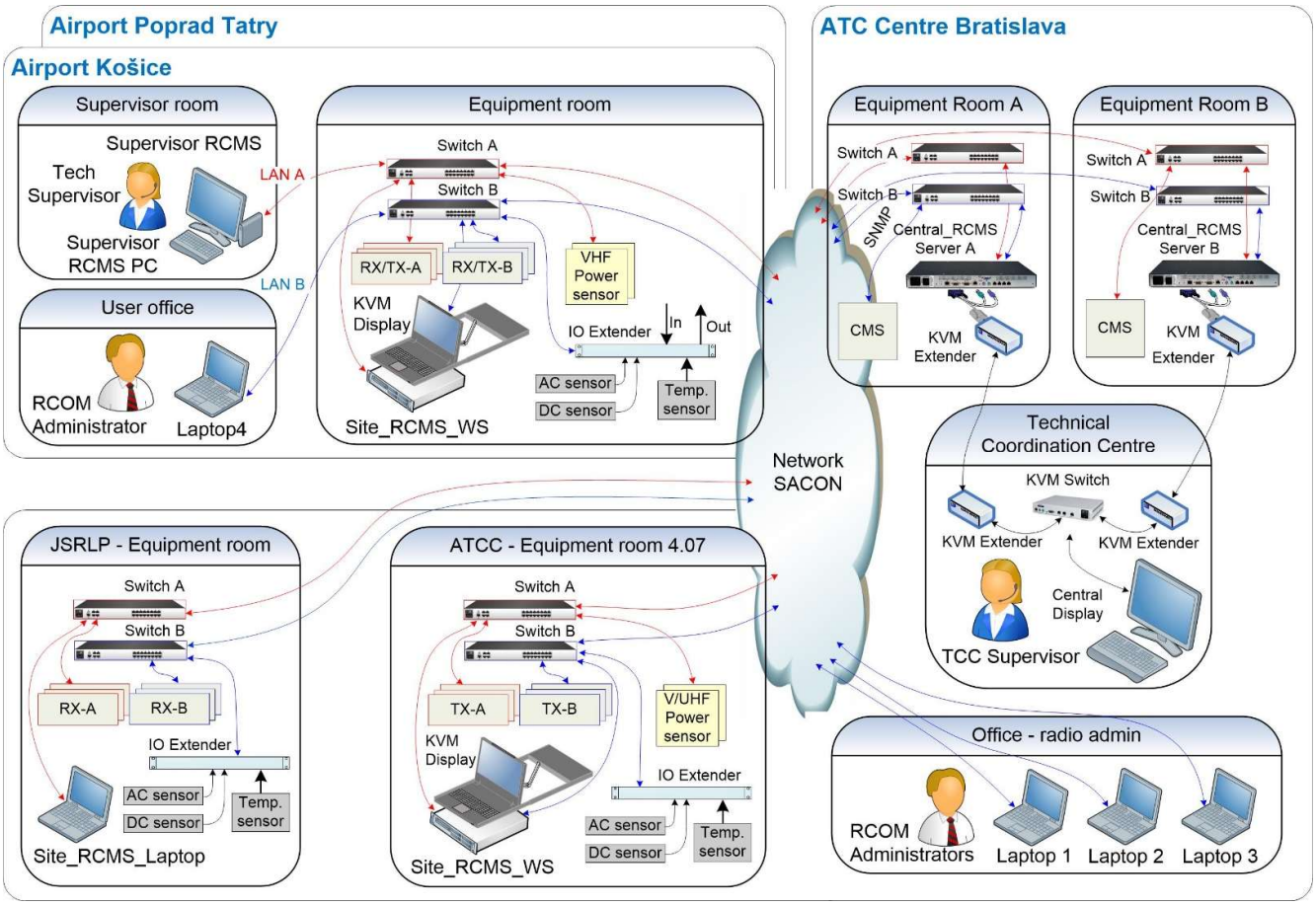

Figure 21 – RCMS topology

LPS will provide redundant network connection for RCMS using network switches A (red) and B (blue) in order to connect A radio devices to A switches and B radio devices to B switches. All frequencies at the radio site will be equipped with A and B radio devices in the Main/Standby mode of operation.

Note: *The network switches and routers are not a subject of the tender.*

TS_4.1_1 The RCMS system shall be expandable for additional radios and additional radio sites. Expansion shall not require additional payment for any licenses. This request has a higher priority in FAT testing.

TS_4.1_2 The RCMS system shall use a network provided by LPS for connection of all equipment with the Site RCMS system and with the Central RCMS system.

TS_4.1_3 All equipment in RCMS shall be accessible for monitoring and control by the Central-RCMS system in the case of any non-functional site RCMS computer. Malfunction of any Site RCMS system shall not have an impact on the operation of the Central RCMS system. The Central RCMS system shall indicate this malfunction by alarm warning.

TS_4.1_4 The RCMS system shall monitor all data links in the system and indicate their failures.

TS_4.1_5 Physical connection of radio devices to network switches shall be organized in harmony with the following rules:
- radio A connected to a network switch A, and
- radio B connected to a network switch B.

TS_4.1_6 The Contractor shall deliver and install patch cords CAT6 for connection of all equipment to the network switches.

TS_4.1_7 The RCMS system shall monitor all connected equipment and indicate its status/failures. Equipment means a receiver, transmitter or transceiver, voltage sensor, door sensor, temperature sensor and VHF/UHF power sensor.

TS_4.1_8 The RCMS system shall be able to control all receivers, transmitters or transceivers.

TS_4.1_9 The RCMS system shall have the capability to be synchronized by the Network Time Protocol version 3 according to RFC1305. The system shall use a local connection to obtain the Time reference signals from the LPS existing Time Reference System. The Central_RCMS_Server_A/B, Site_RCMS_WS, Supervisor_RCMS_PC and Site_RCMS_Laptop shall receive time synchronization (NTP) through configurable TCP/IP v.4 communication with an NTP server with the following minimum requirements:
- connection type – client;
- configurable local connection port;
- remote IP address and remote port;
- the system shall be capable of simultaneous connection to 2 remote NTP addresses (main and standby NTP servers).

4.2. *RCMS license*

TS_4.2_1 The licenses for the software applications on the servers, workstations, PCs and laptops must be transferable to new hardware in case of a necessary replacement of the hardware in the future.

TS_4.2_2 The transfer of the license to a new hardware must not require the intervention of the supplier. The use of hardware keys is preferred. If it is necessary to use a specialized application to generate the license key, this application must be part of the delivery. This request has a higher priority in FAT testing.

4.3. *Site-RCMS system*

TS_4.3_1 The Site-RCMS system at the airports shall consist of work station Site_RCMS_WS installed into radio cabinet, personal computer Supervisor_RCMS_PC installed in Supervisor room, laptops for administrators (using remote desktop to Site_RCMS_WS), IO Extender, VHF power sensors, door sensors, voltage sensors and temperature sensors.

TS_4.3_2 The Site-RCMS system at the airports shall provide HMI for:
- technician working in the airport equipment room by Site_RCMS_WS,
- supervisor in Supervisor room by Supervisor_RCMS_PC and
- administrators of the system via remote desktop from theirs laptops

TS_4.3_3 Site-RCMS system for ATCC shall consist of Site_RCMS_WS installed into transmitter cabinet at ATCC, Site_RCMS_Laptop for RX station at JSRLP, IO Extenders, VHF power sensors, door sensors, voltage sensors and temperature sensors. Technician will be able to connect Site_RCMS_Laptop to LAN switch in order to control and monitor all receivers

and transmitters installed on the relevant RX and TX station. This laptop will be used just for maintenance and normally will be switched off.

TS_4.3_4 The Site-RCMS system for ATCC will provide HMI for:
- technician in ATCC equipment room by Site_RCMS_WS and
- technician in JSRLP equipment room by Site_RCMS_Laptop

TS_4.3_5 The Site_RCMS_Laptop and Site_RCMS_WS shall be preinstalled with the RCMS application. The power supplies and the temperature will be monitored for all RX and TX cabinets.

TS_4.3_6 The IO extender shall provide extension of LAN to other serial protocols and discrete signals which can be used for sensors. The above-mentioned equipment and devices will be accessible via LAN connection in the Site-RCMS and Central-RCMS.

TS_4.3_7 The RCMS shall not support any data exchange between Site-RCMSs. For example, for user at Košice shall be accessible only radios at Košice, but radio sites at other airports and ATCC will be forbidden.

4.4. *Central-RCMS system*

TS_4.4_1 The Central RCMS shall consist of a Central_RCMS_Server_A and Central_RCMS_Server_B, central display, two pairs of KVM extenders, KVM switch and administrators laptops as shown in the Figure 21.

TS_4.4_2 The RCMS servers shall be installed separately in two independent Equipment Rooms A and B as shown in the Figure 21. The connection for this servers will be provided by network switches operated by LPS.

TS_4.4_3 The Central-RCMS shall collect data from all radio devices and sensors installed at all radio sites. The system shall not depend on the functionality of any Site RCMS systems. It means, that all equipment (RX, TX, sensors) shall be able to send data directly to both servers A and B of the Central RCMS independently on the Site RCMS.

TS_4.4_4 Central system shall provide database information regarding availability, activity on the frequency, alarms, etc. All information shall be exportable to standard electronic documents to enable evaluation of operational parameters of the Radio Communication System.

TS_4.4_5 All information and control functions shall be available on the central display located in the Technical Coordination Centre (TKC) for 3 level of users.

TS_4.4_6 The Central-RCMS system shall provide HMI for:
- supervisor in Technical Coordination Centre by Central_RCMS_Server_A/B and
- administrators of the system via remote desktop to all Site_RCMS_WS and both Central_RCMS_Server_A/B from theirs laptops

TS_4.4_7 The Central RCMS shall be able to send SNMP traps and answers to pooling for Central Monitoring System (CMS). CMS is a higher level monitoring systems involving radio, navigation, surveillance and other ATC systems. SNMP traps and answers to pooling shall cover basic information about the status of the radio communication system for a H24 supervisor.

TS_4.4_8 The RCMS system shall be able to work on both servers simultaneously without mutual influence. Both servers shall provide full function of RCMS system.

TS_4.4_9 System performance and continual service shall not be affected when a one of server fails or performs rebooting. If one server is out of operation in the case of reinstallation or failure, the other server shall provide full operation.

4.5. *Hardware specification*

4.5.1. Central RCMS Server

TS_4.5.1_1 The Contractor shall supply 3 identical servers. Two pieces for operation system and one will be a spare.

TS_4.5.1_2 The servers shall be commercial off the shelf, racked into 19" industrials cabinets.

TS_4.5.1_3 The RCMS Servers shall have at least the following characteristics:

- Form factor: rack mounted 19",
- Number of processor cores: at least 4,
- RAM: 16 GB, DDR4,
- Hard disk drive: 2x 2 TB minimum; in RAID_1 configuration,
- 2x LAN Ethernet port 100/1000 Mbit/s,
- 4x USB v3.2 ports,
- VGA D-SUB or DVI or HDMI port and
- OS: Microsoft Windows Server 2021 or newest.

TS_4.5.1_4 The Central RCMS Server shall be powered by 230VAC single phase. The frequency 50Hz ±2% shall be met. AC Supply Voltage Variation tolerance -10/+15 % shall be met.

4.5.2. Site RCMS Work Station

TS_4.5.2_1 The Contractor shall supply 4 identical Site_RCMS_WS. Three pieces for operation system in ATCC, Poprad Tatry, Košice and one will be a spare.

TS_4.5.2_2 The Site_RCMS_WS shall be installed in radio cabinet as shown in the Figure 21. Work stations must be suitably adapted for installation in the cabinet. The supplier can also decide to install the server, but it is not necessary.

TS_4.5.2_3 The Site_RCMS_WS shall have at least the following characteristics:

- Number of processor cores: 4,
- RAM: 16 GB, DDR4,
- Hard disk drive: 2 TB,
- 1x LAN Ethernet port 100/1000 Mbit/s,
- 4x USB v3.2 ports,
- VGA D-SUB or DVI or HDMI port and
- OS: Microsoft Windows 11 Professional, or Windows Server 2021 or newest

TS_4.5.2_4 The Central RCMS Server shall be powered by 230VAC single phase. The frequency 50Hz ±2% shall be met. AC Supply Voltage Variation tolerance -10/+15 % shall be met.

4.5.3. Supervisor RCMS Computer

TS_4.5.3_1 The Contractor shall supply 3 identical Supervisor_RCMS_PC with LCD displays, keyboards and mouse for the Site RCMS system for the airports Poprad-Tatry and Košice as shown in the Figure 21. Two pieces for operation system and one will be a spare.

TS_4.5.3_2 The Supervisor_RCMS_PC shall be installed under the work table in supervisor room. Due to lack of space, this computer shall be mini or micro tower.

TS_4.5.3_3 The RCMS Servers shall have at least the following characteristics:

- Form factor: micro or mini tower for installation into table.
- Processor – Core i7 or i9,
- RAM: 16 GB, DDR4;
- Disk drive type SSD: 512 GB,
- 1x LAN Ethernet port 100/1000 Mbit/s;
- 3x USB v3.2 ports;
- HDMI or Display port.
- OS: Microsoft Windows 11 Professional

TS_4.5.3_4 The LCD display with a keyboard for a Site RCMS system shall have at least the following characteristics:
- diagonal at least 17";
- resolution 1280 x 1024 @ 75Hz or higher;
- brightness 300 cd/m2 or higher;
- contrast ratio 800:1 or higher;
- keyboard slovak.

TS_4.5.3_5 The LCD display shall be installed above existing displays, and this require arm extension or some special holder. Final solution will be discussed during site survey.

TS_4.5.3_6 The Site RCMS computer with an LCD display, keyboard and mouse shall be powered by 230VAC single phase with the frequency of 50Hz ±2% and the AC Supply Voltage Variation tolerance -10/+15 %.

4.5.4. Laptop

Laptop will be used by system administrators via remote desktop to all Site_RCMS_WS and to Central_RCMS_Server_A/B. One laptop will be used with preinstalled RCMS system as an additional Site RCMS system during site maintenance at receiver site in JSRLP.

TS_4.5.4_1 The Contractor shall supply 7 pieces of identical laptops. The delivery will include 7 leather carrying bags. One laptop for ATCC receiver site shall be preinstalled with Site RCMS application. Other laptops will be connected to the RCMS servers by remote desktop without installed RCMS software.

TS_4.5.4_2 The Laptop shall comply with the following or better parameters:
- OS: Windows 11 professional
- Display size: at least 17" with resolution 2560x1600 or higher,
- Display with matte surface or antiglare coating,
- Processor – Core i9 or i9Ultra,
- RAM: at least 32 GB, DDR5,
- Disk drive type NVMe or SSD: at least 2000 GB,
- Interfaces: 2x USB-C, WiFi, USB 3.2 ports

4.5.5. Central Display

The Central Display will provide graphic and audio presentation of HMI. The Central Display will consist of an LCD display, a keyboard and a mouse. This equipment will be connected to RCMS servers by IP extenders and a KVM switch in line with the Figure 21.

TS_4.5.5_1 The Central Display shall be equipped with:
- LCD display;
- Keyboard - Microsoft Standard;
- Mouse - Microsoft Standard, optical, with scroll wheel;
- Inbuilt stereo speakers for audio indication of alarms.

TS_4.5.5_2 The Contractor shall supply two pieces of LCD displays, two keyboards and two mousses. One LCD display, keyboard and mouse shall be installed in the TCC and the second set will be spare.

TS_4.5.5_3 The LCD display for the Central Display shall comply with the following specification:
- panel size 24" Wide Screen or higher;
- resolution 1920x1200 or higher;
- brightness 400 cd/m2 or higher;
- contrast ratio 1000 :1 or higher;
- response time 5 ms or lower;
- inbuilt stereo speakers for audio indication of alarms.

4.5.6. IP Extender and KVM Switch

TS_4.5.6_1 The Contractor shall deliver and install two pairs of IP extenders between the Central Display and RCMS servers as shown in the Figure 21.

TS_4.5.6_2 The Contractor shall deliver and install a KVM Switch on the position of RCMS user.

TS_4.5.6_3 The IP Extenders shall be designed for rack mounted 19" installation.

TS_4.5.6_4 The KVM Switch shall be designed for desktop installation.

TS_4.5.6_5 The KVM Switch and IP extenders shall allow to connect a USB memory stick to the KVM switch to copy files directly from the RCMS servers A and B.

TS_4.5.6_6 The Contractor shall deliver and install all necessary cabling between RCMS servers and Central Display.

LPS will ensure CAT6 structure cabling between IP extenders in equipment rooms and IP extenders in the Technical Coordination Centre.

TS_4.5.6_7 The KVM Switch shall comply with the following specification:

- VGA resolution up to 1920 × 1440 @ 75 Hz or 2k × 2k @ 60Hz;
- Video bandwidth VGA up to 400 MHz;
- Digital color mode 24 bit or analogue;
- Switches audio and transparent USB 2.0 signals;
- audio plugged by 3.5 mm jack plug;
- audio bandwidth 22kHz;
- Internal power supply;
- PS/2 and USB keyboard/mouse support;
- Computer-sided support for USB.

TS_4.5.6_8 The IP Extender shall comply with the following specification:

- Full HDMI resolution at least 60Hz;
- Transmission up to 300 m over CAT6 cables at maximum resolution;
- Transmission for USB 2.0 over CAT6 cables;
- Switches audio and transparent USB 2.0 signals;
- audio plugged by 3.5 mm jack plug;
- audio bandwidth 22kHz;
- Internal power pack and redundant power supply;
- PS/2 and USB keyboard/mouse support;

4.5.7. Sensors

TS_4.5.7_1 The Contractor shall deliver and install a Temperature sensor and Voltage sensor for each radio RX/TX/TRX cabinet.

TS_4.5.7_2 The Temperature sensor shall provide information about the inside temperature at the top of the radio cabinet.

TS_4.5.7_3 The Voltage sensor shall provide information about voltage values AC-A, AC-B, DC-A and DC-B power supply. The voltage shall be measured separately for each radio cabinet on the distribution panel inside the cabinet. It means two analogue/digital converters for AC and two analogue/digital converters for DC measuring.

TS_4.5.7_4 The accuracy of the voltage measurement shall be better than 10 percent of the nominal value.

TS_4.5.7_5 The temperature, AC voltage, DC voltage and lock information from cabinets shall be available in Site-RCMS and the Central-RCMS via IO Extender or directly using LAN connection.

TS_4.5.7_6 The temperature, AC voltage, DC voltage and lock information shall be accessible in Central RCMS system in case of failure of Site_RCMS_WS.

4.5.8. IO Extender

The IO Extender provides LAN interface to the RCMS system for sensors equipped by serial interfaces or discrete signals as shown in the Figure 21. The sensors equipped by LAN interface, may be connected to the network switch directly without using the IO Extender. If all sensors will be equipped by LAN interface, the IO Extender will be irrelevant and need not be delivered.

TS_4.5.8_1 If the sensors require conversion to LAN interface, the Contractor shall supply the IO Extender.

TS_4.5.8_2 The IO Extender shall provide network connection for sensors (voltage, temperature and lock sensor) which does not have LAN interface to the RCMS system.

TS_4.5.8_3 The IO Extender shall be equipped by configurable LAN interface for connection to the network with the following minimum requirements:
- configurable local connection port;
- configurable local connection mask and gateway;
- configurable speed.

TS_4.5.8_4 The IO Extender shall be designed for installation into 19" cabinets.

TS_4.5.8_5 The IO Extender shall be powered by a power supply of 230 VAC and by a power supply of 24 VDC with automatic switchover between AC/DC.

4.6. *RCMS Software Application*

4.6.1. General Requirements

TS_4.6.1_1 The complete RCMS software application shall be available on USB memory stick.

TS_4.6.1_2 The installation file shall enable the administrator to install RCMS software.

TS_4.6.1_3 The RCMS software application shall be installed on one Site_RCMS_Laptop, 3x Site_RCMS_WS, 2x Supervisor_RCMS_PC (Poprad-Tatry and Košice) and 2x Central_RCMS_Server_A/B. Other laptops will use remote desktop for system checks.

TS_4.6.1_4 The RCMS software application shall be marked by index of the current version. If a new version/versions of the application are released, a specific document shall be issued for each software corrective release. This document shall describe the functionality and bugs.

TS_4.6.1_5 The RCMS software application shall be configurable for Site-RCMS or Central-RCMS part.

TS_4.6.1_6 The RCMS software application installed on the Central_RCMS_Server_A/B shall be able to **monitor** all equipment at all radio sites.

TS_4.6.1_7 The RCMS software application installed on the Central_RCMS_Server_A/B shall be able to **control** the Receivers, Transmitters and and antennae switch at all radio sites.

TS_4.6.1_8 The RCMS software application installed on a Site_RCMS_WS, Supervisor_RCMS_PC and on the Site_RCMS_Laptop shall be able to monitor and control only equipment at the relevant radio site. Access to equipment installed at other radio sites shall be forbidden.

TS_4.6.1_9 If a radio site is split into RX and TX stations, the Site_RCMS_Laptop and the Site_RCMS_WS shall be able to monitor and control all equipment on both RX and TX stations vice versa.

TS_4.6.1_10 The RCMS software application shall provide user-initiated switching between main and standby radios in the case of a failure or for maintenance/reconfiguration purposes available locally from the Site RCMS or remotely from the Central RCMS system.

Note: The Voltage Sensor, Temperature Sensor, Lock Sensor and RF Power Sensors will be just monitored without the capability to control.

4.6.2. HMI

TS_4.6.2_1 The RCMS software application shall have a user friendly Human Machine Interface (HMI) based on well-known and widely used standards.

TS_4.6.2_2 The user at the administrator level shall be allowed to change and organize the content of the screens in data and/or graphical form, e.g. sites, radios, ancillary equipment, etc.

TS_4.6.2_3 Critical operational alarms shall be presented in an RCMS alarm message window. The alarm data shall contain all alarm details, e.g. date, time, alarm description, equipment location, etc.

TS_4.6.2_4 Combined color alarm signals from radios and sites shall be used to present the current operational status of system elements. For example, the following color palette is desirable:

- No fault - Green color
- Fault - Red color;
- Warning - Yellow color;
- Unknown state - Grey color.

TS_4.6.2_5 The color scheme shall be managed by the administrator. Each message, warning and alarm shall be configurable in a color palette of at least 16 colors.

TS_4.6.2_6 The RCMS software application for the Central RCMS shall include screens which shall be organized in three levels:

- Level 1 shall display all radio equipment at all radio sites;
- Level 2 shall display all equipment at a selected radio site;
- Level 3 shall display single selected radio equipment.

TS_4.6.2_7 The RCMS software application for a Site RCMS shall include screens for levels 2 and 3.

TS_4.6.2_8 The screen for the level 1 shall display basic information about the radio site and connection. If there is any alarm or warning at the site, the graphic object representing the radio site or the connection shall be displayed in the corresponding color.

TS_4.6.2_9 Alarms and warnings for the level 1 screen shall be triggered based on the radio status, connection status, high temperature in a cabinet, low power supply AC and DC and high WSVR on the RF Power Monitor.

TS_4.6.2_10 Alarms and warnings based on temperature, power supply AC and DC and high WSVR shall be configurable by the administrator who will set minimum and maximum values for each sensor. If a parameter is beyond the defined interval, the Central RCMS system and the Site RCMS system shall automatically trigger alarm or warning.

TS_4.6.2_11 The level 1 screen shall display radio equipment for each radio site in separate rows in line with the Figure 22.

TS_4.6.2_12 The administrator shall be able to create and modify a frequency object at a radio site by grouping radio equipment installed at the particular radio site based on their IP addresses.

TS_4.6.2_13 Colors for a frequency object on the level 1 screen shall follow the below-stated rules:

- green color means no alarm or warning;
- red color means alarm on RX, TX, different setting of frequency for one object;
- yellow color means warning, yet the frequency may be used;
- grey color means an unknown status (lost connection);
- orange color means active Squelch or Carrier during transmitting and receiving;

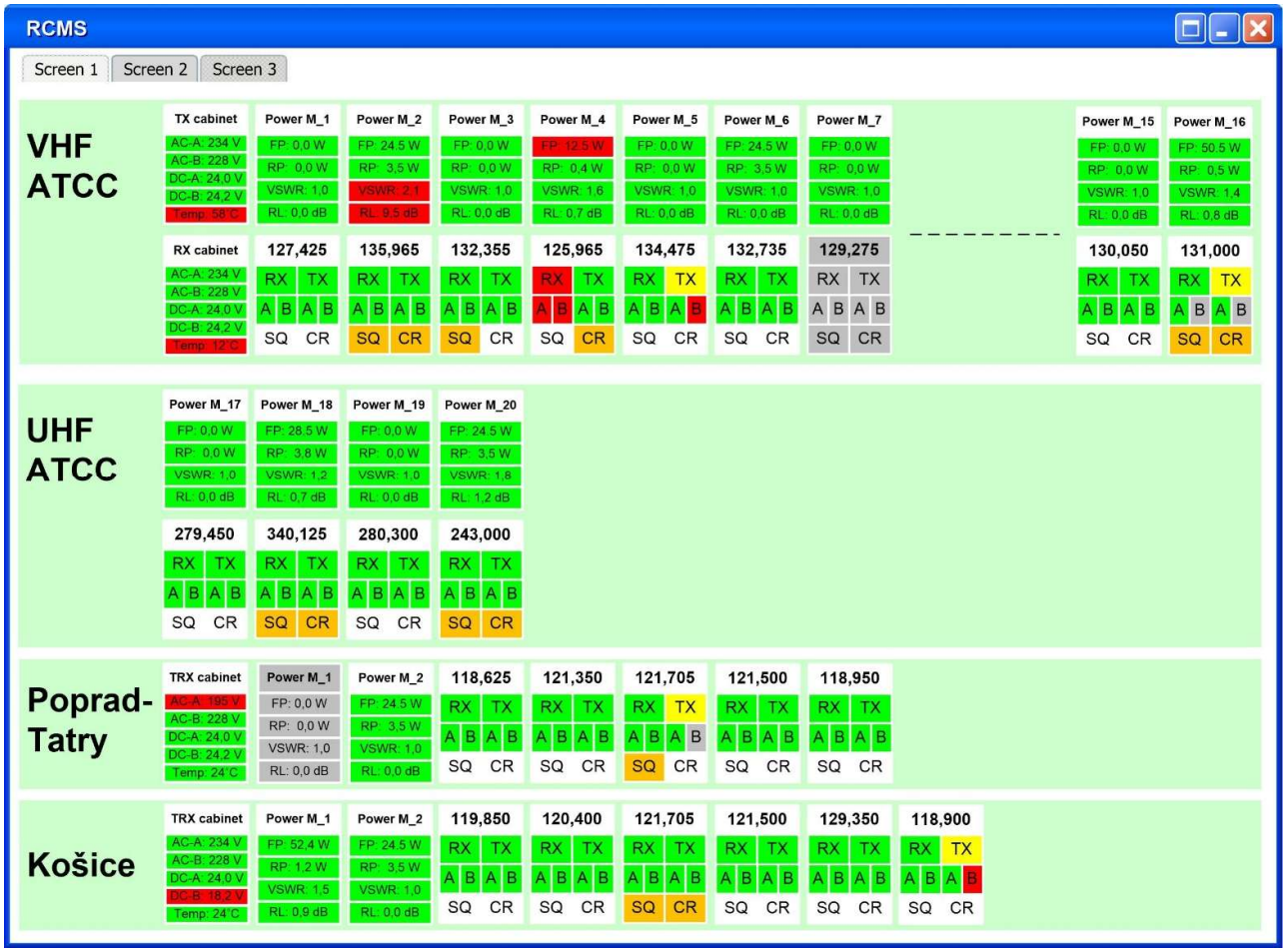

Figure 22 –Level 1 screen

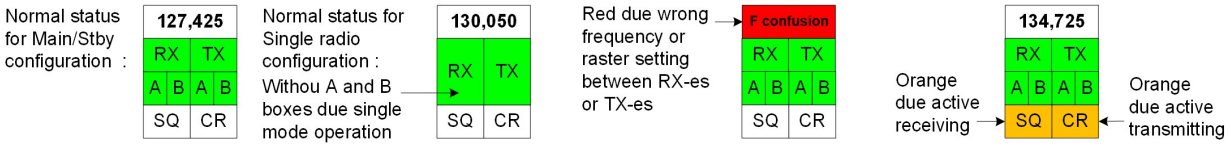

Figure 23 – Statuses 1 of frequency objects

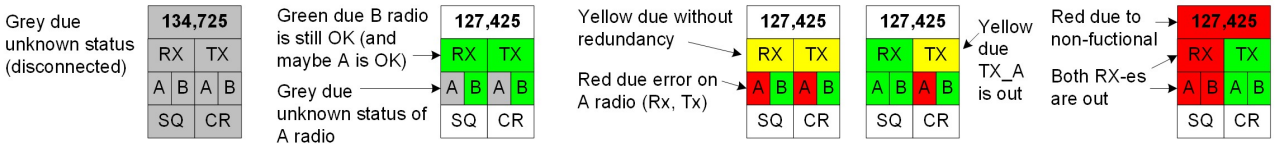

Figure 24 – Statuses 2 of frequency objects

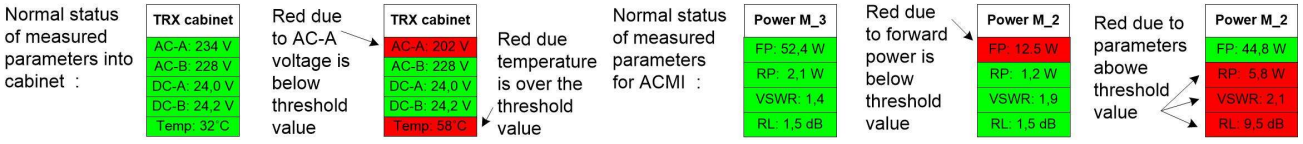

Figure 25 – Statuses cabinet and RF Power Meters

TS_4.6.2_14 The administrator shall be able to set the number of radio sites for the level 1 screen. The RCMS software application shall be able to display at least 8 radio sites (other airports in the future). Scrolling is necessary.

TS_4.6.2_15 The administrator shall be able to configure two logical sites from one radio site in order to separate VHF/UHF equipment in line with the Figure 22.

TS_4.6.2_16 Screens for the level 2 shall display all equipment at a selected radio site. This means all radios (RX/TX/TRX), Voltage, Temperature and Lock Sensors and RF Power Meters.

TS_4.6.2_17 The RF Power Meter shall display the current throughput forwarded and reflected RF power, return loss and VSWR. The position of Power Meters objects "Power_M" shall be relevant (above) to position of the radio.

TS_4.6.2_18 Antenna switch for the airport Poprad-Tatry shall be displayed for the level 1 and 2 screen and shall allows direct switching between RX1 and RX2 antenna.

TS_4.6.2_19 Screens for the level 3 shall display only a selected radio described in the Radio Data Presentation.

TS_4.6.2_20 Whenever an alarm goes off, a visual and audio signal shall be generated by the Central Display.

TS_4.6.2_21 The user shall be able to adjust the volume of the alarm signalization.

TS_4.6.2_22 The administrator shall be able to change the alarm sounds.

TS_4.6.2_23 All system-generated alarms or alerts and subsequent operator confirmations shall be logged and stored in the computer.

TS_4.6.2_24 The RCMS software application shall facilitate generation of various reports as selected by the user. It shall be possible to create a report of listed logs between two specified dates/times.

TS_4.6.2_25 Reports shall cover the current and past statuses in several combined or divided forms:

- Radio equipment status and alarms;
- Transmission and ancillary equipment status and alarms;
- Radio equipment configuration (operational parameters and settings) for each unit and/or system.

TS_4.6.2_26 It shall be possible to archive all reports and configurations and recall them in the RCMS software application with a version date/number.

TS_4.6.2_27 A history of all logs currently stored in the computer shall be provided in chronological order in a database format to enable easy export to standard office documents such as Acrobat Reader, Microsoft Excel and Microsoft Word.

TS_4.6.2_28 A full range of features shall be provided within the database to perform statistical analysis in a character and graphical form (for longer time periods) and to retrieve, query, analyze and report on logged data through the dedicated database.

TS_4.6.2_29 All collected events and data shall be logged for a period of at least 2 years. The RCMS system shall have sufficient storage capacity to retain all logs for at least 2 years.

TS_4.6.2_30 The RCMS software application shall be capable to generate automatic warning in the case of insufficient disk space on the Central servers and Site computer/workstation.

TS_4.6.2_31 It shall be possible to save the RCMS configuration parameters of radio and ancillary equipment on an external USB memory stick connected to a KVM Switch on the Central Display and to restore the previous (saved) configuration at any time, if needed.

4.6.3. User Access Levels

TS_4.6.3_1 The user at the administrator level shall be allowed to configure access levels for each user. It shall be possible to configure a password for each individual user. Security/access levels:

- ○

TS_4.6.3_2 The RCMS system shall automatically transfer user access rules to other Site-RCMS systems. Any user account created in the Central RCMS system shall be applied in other Site RCMS systems as well.

TS_4.6.3_3 Account and password shall be authenticated before access is granted to the RCMS application.

TS_4.6.3_4 The RCMS application shall enable access to all settings at the administrator level. The administrator shall be able to configure the composition of equipment connected to the RCMS - add and remove equipment in the RCMS application, etc.

4.6.4. Radio Data Presentation

TS_4.6.4_1 Due to a large volume of information, the radio data presentation window shall be logically segmented into several cards, for example Status card, Measurement card, Setting card, Preset card (setting of preset parameters) and Events card (displaying alarms, warnings and info events) or their equivalents.

TS_4.6.4_2 The radio presentation window shall contain at least the following monitored statuses and parameters or their equivalents:

a) Global status:
   - Go/NoGo status;
   - Ok/Not_Ok (represents recognized events);
   - ACTIVE/INACTIVE.

b) Error status:
   - Voltage (represents status of internal power supply);
   - VSWR (represents mishmashes antenna – high VSWR);
   - Temperature (represents internal temperature).

c) Access to the radio:
   - Remote/Local.

d) Transmitter:
   - PTT status;
   - Trigger Test Tone;
   - Carrier status;
   - Frequency;
   - Channel;
   - Channel Spacing (Raster);
   - TX Carrier (represents information of the current offsets configuration);
   - TX power set;
   - Main/Stby status;
   - Measurement of the current Tx Power to the antenna;
   - Measurement of modulation depth;
   - Measurement of the current VSWR level (represents VSWR during transmission);
   - Measurement of DC internal voltage level;
   - Measurement of internal temperature;
   - Measurement of audio level input (analogue modulation signal);
   - Events for warnings, errors and alarms.

e) Receiver:
   - Squelch status;
   - Current reception (represents received signal);
   - Frequency;
   - Channel Spacing (Raster);
   - Squelch Threshold RSSI (analogue value for Rx Signal Strength);
   - Squelch Threshold (signal + noise);
   - Main/Stby status;
   - Measurement of the current RSSI level;

- Measurement of the audio level (represents the current audio level on audio output);
- Measurement of DC internal voltage level;
- Measurement of internal temperature;
- Events for warnings, errors and alarms.

TS_4.6.4_3 The radio presentation window shall contain at least the following control functions or their equivalents:

a) Access to the radio:
   - Switch to Control or Monitor mode.

b) Transmitter:
   - PTT button for activating/deactivating PTT;
   - Tone button for activating/deactivating PTT with 1kHz audio tone;
   - Setting the frequency in the range of VHF or UHF band;
   - Setting the channel spacing - raster (8.33 kHz or 25 kHz);
   - Setting the carrier offset;
   - Setting the Tx power level;
   - Setting the modulation mode (AM/FM/ACARS/…);
   - Setting the PTT timeout;
   - Setting the Main/Stby mode (main/standby configuration);
   - Inactivate the Transmitter;
   - Restart the Transmitter;
   - Restart the TCPIP connection;
   - Set RTC (Real time Clock) from the RCMS system.

c) Receiver:
   - SQ button for activating/deactivating squelch;
   - Setting the frequency in the range of VHF or UHF band;
   - Setting the channel spacing - raster (8.33 kHz or 25 kHz);
   - Setting the Squelch Threshold RSSI (in uV);
   - Setting the Squelch Threshold SN (in dB);
   - Setting the modulation mode (AM/ACARS/…);
   - Setting the Main/Stby mode (main/standby configuration);
   - Inactivate the Radio;
   - Restart the Receiver;
   - Restart the TCPIP connection;
   - Set RTC (Real time Clock) from the RCMS system;
   - Setting the AGC for audio signal (on/off).

TS_4.6.4_4 All presented information shall be updated online depending on the real status. The delay between data presentation and status change shall not be higher than 1 second.

TS_4.6.4_5 The system shall provide the BITE (built-in test equipment). The system shall monitor the condition of system components and the status of connection, and shall provide alarms and diagnostic information on a failed system component.

4.6.5. RCMS Output to CMS

The RCMS system will be able to send SNMP traps to CMS (Central Monitoring System) and to other monitoring systems in the case of any alarm or significant change of important parameters. Additionally, the RCMS system will be able to answer requests from CMS and from other monitoring systems (pooling). The SNMP traps and pooling data will cover basic information about the status of the Radio Communication System for the H24 supervisor. Only the monitoring function will be enabled for CMS.

TS_4.6.5_1 The RCMS system shall not allows the control function from other monitoring systems.

TS_4.6.5_2 The RCMS system shall allows the management of the list of enquirers according to IP address. The RCMS system shall be able to answer to at least five CMS systems (clients). The SNMP traps and answers shall be enabled only for systems with defined IP addresses.

TS_4.6.5_3 The Central RCMS servers shall send SNMP v2c and v3 traps to the Central Monitoring System. The traps and answers on requests shall be sent form both Central_RCMS_Server_A/B in identical MIB structure and values on specific OID.

TS_4.6.5_4 The SNMP traps shall be generated automatically by any change in the status or by exceeding the threshold interval for selected parameters.

TS_4.6.5_5 Parameters with a threshold interval shall be configurable for minimum and maximum values by the administrator. If a parameter is beyond a defined interval, the Central RCMS system shall automatically generate an SNMP trap. Parameters with threshold intervals are underlined – Temperature, RSSI level, VSWR, power supply.

TS_4.6.5_6 MIB traps shall be managed at the administrator level.

TS_4.6.5_7 Contractor may offer his own structure of MIB, however Central RCMS servers shall send at least the following mandatory traps and answers on requests:

1) **Receiver data** – represents both receivers on the same frequency.
[**RX**, site, frequency, Status=(3/2/1/0), Act=(A/B/A+B), RSSI=(level from active or from A or B – which is higher), Squelch= (0/1-if one of them is active)]

Example 1: two receivers (in Main/Stby mode) in site ATCC on frequency 121,500 and both are without fault or alarm or warning with active receiving signal on both receivers
[**RX**, ATCC, 121.500, Status=3, Act=A+B, RSSI=-87dBm, SQ=1]

Example 2: A receiver is fault, B is without active receiving signal
[**RX**, ATCC, 121.500, Status=2, Act= B, RSSI=-128dBm, SQ=0]

Example 3: both receivers are fault or not able to receive
[**RX**, ATCC, 121.500, Status=1, Act=NA, RSSI=NA, SQ=NA]

Example 4: both receivers are switched off
[**RX**, ATCC, 121.500, Status=0, Act=NA, RSSI=NA, SQ=NA]

2) **Transmitter data** – represents both transmitters on the same frequency.
[**TX**, Site, Frequency, Status=(3/2/1/0), Active=(A/B), last active output RF power = (value measured on TX), last VSWR during active transmission = (measured on TX)]

Example 5: transmitters (in Main/Stby mode) on the airport Košice on frequency 118,500 - both are without fault or alarm or warning, active is B
[**TX**, LZKZ, 118.500, Status=3, Act=B, LastPow=48W, LastVSWR=1,45]

3) **Transceiver data** – represents both transceivers or in case of separated RX and TX represents both receivers together with both transmitters on the same frequency.
[**TRX**, Site, Frequency, Status=(3/2/1/0), ActRX=(A/B/A+B), RSSI=(level from active or from A or B – which is higher), Squelch=(0/1- from active or from A or B if one of them is 1), ActTX=(A/B), last active output RF power = (value measured on TX), last VSWR during active transmission = (measured on TX)]

Example 6: transceivers (in Main/Stby mode) on the airport Poprad-Tatry on frequency 121,350 – B has warning, active is A, presented active receiving signal

[**TRX**, LZTT, 121.350, Status=2, ActRX=A, RSSI=-92dBm, SQ=1, ActTX=A, LastPow = 48W, LastVSWR = 1,45]

Example 7: receivers in JSRLP and transmitters in ATCC (in Main/Stby mode) on frequency 134,725 – both receivers are OK and active, presented active RF signal on receivers A=-102dBm B=-98dBm, transmitter A is fault

[**TRX**, ATCC, 134.725, Status=2, ActRX=A+B, RSSI=-98dBm, SQ=1, ActTX=B, LastPow = 45W, LastVSWR = 1,25]

4) **Cabinet data** – represents statuses of cabinets for receivers and transmitters.
[**Cabinet**, Site, Name=(RX/TX1/TX2), Temp=(value), ACA=(value), ACB=(value), DCA=(value), DCB=(value), Lock=(0-unlocked/1-locked)].

Example 8:

[**Cabinet**, ATCC, TX1, Temp=24, ACA=232, ACB=228, DCA=24.5, DCB=23.4, Lock=1]

Note:
1) Site = ATCC or LZKZ or LZTT or (added in the future)
2) All radios are in Main/Stby configuration
3) This status represents availability for receiving and transmitting;
   3 - unlimited means ready for receiving and/or transmitting from both receivers or transmitters without fault or warning;
   2 - limited means ready for receiving and transmitting with some alarm or warning, but at least one receiver with transmitter is usable, second receiver with transmitter is in fault or alarm or warning;
   1 - unusable means without a possibility to receive and/or transmit;
   0 - unknown means no information about receiver and/or transmitter.
4) NA – not applicable

TS_4.6.5_8 MIB base provided by an SNMP agent shall be detailed and adequately described. Data in the MIB agent base shall be organized in logical entities organized as per parts of the system.

TS_4.6.5_9 If any part of system fails or there is no information about it, the failing branch shall still exist in the MIB and its values shall be set to an appropriate value or to an unknown value.

TS_4.6.5_10 The RCMS software shall be able to response on a SNMP GET and SNMP GETNEXT request in accordance with appropriate documentation of the SNMP protocol. The mandatory traps listed in TS_4.5.5_7 shall be available on these requests.

TS_4.6.5_11 It shall be possible to use some software application such as MIB browser for obtaining data. This application shall be delivered and installed by the Contractor.

TS_4.6.5_12 The RCMS system shall record all SNMP traps and data flows to other monitoring systems. Data shall be stored in a standard database system.

5. CYBERSECURITY REQUIREMENTS

This chapter describes a list of cybersecurity requirements for information systems and related infrastructure that are delivered to the LPS SR and implemented on Windows or Unix/Linux operating system platforms.

5.1. *General requirements*

TS_5.1_1 The solution shall only use TLS protocol settings, encryption algorithms, encryption keys, hash functions and other security components and solutions, that are deemed secure by the relevant institutions (NIST, PCI SSC, NSA).

TS_5.1_2 The solution shall assign a unique identifier for all users for authentication to enter the information system.

TS_5.1_3 For user interface accounts, strong passwords shall be used for authentication. A strong password shall be at least ten characters long and shall contain a combination of uppercase and lowercase letters and numbers.

For protocol accounts, the password policy may be implemented in accordance with the authentication and security capabilities supported by the respective protocol.

5.2. *VHF and UHF transmitter and receiver requirements*

TS_5.2_1 Manufacturer's ISMS (Information Security Management System) shall be ISO/IEC 27001 certified.

TS_5.2_2 The radio shall use the "Secure Boot" mechanism to ensure that only software signed by the manufacturer can be loaded during the boot process.

TS_5.2_3 Software configuration interface shall be protected against unauthorized use. Only authorized users shall be allowed to access the configuration interface.

TS_5.2_4 The radio shall provide role-based access to the software configuration interface. At least 4 roles are required:

- Operator - Has the right to view the status and the configuration of the radio.
- Controller - Has the same rights as an "Operator" and can also change certain settings.
- Configurator - Has the same rights as a "Controller" and can configure the radio and manage software updates and licenses.
- Administrator - Has the same rights as "Configurator" and can also manage the users and their roles.

TS_5.2_5 The radio shall provide an option to filter remote-control clients based on "Access Control Lists" (ACL). It shall be possible to define at least 15 IP,MAC or IP and MAC addresses of remote-control clients with access allowed for each interface.

TS_5.2_6 The radio shall support use of secure protocols for connection with remote-control clients. The radio shall be equipped with a security certificate management system for uploading the new certificates and for reporting expired security certificates to a central entity.

TS_5.2_7 The radio shall provide "Firewalling" on all network interfaces to discard undesired and malformed packets.

TS_5.2_8 The radio shall support link aggregation (bonding) of Ethernet interfaces.

5.3. *Hardening*

TS_5.3_1 Delivered Solution shall:

a) be installed on the minimum required operating system configuration, for example Server Edition or Server Core
b) have uninstalled all processes and services that are not strictly necessary for the solution applications to run
c) have disabled all implicit processes and services that are not strictly necessary for running the applications, including:
    - OS Windows Client for Microsoft Networks
    - OS Windows File and Printer Sharing for Microsoft Networks
    - OS Windows Link Layer Topology Discovery
d) have all unnecessary system accounts removed
e) have disabled all unnecessary default system accounts
f) have a local firewall activated and configured on a least privilege basis for all active services accessible over the network, including implicit services such as Microsoft RPC, DFS, etc. The local firewall rules must be tuned to the minimum extent possible during the Site Acceptance Tests phase of the SAT.
g) have the passwords of all system accounts set to values that meet the strong password parameters, see 2(c)
h) have changed the passwords of all software components of the system from default values to passwords that meet the parameters of a strong password, see point 2(c)
i) in the case of a Linux operating system that allows the activation of name-based mandatory access controls, e.g. using the AppArmor module, such module shall be activated in enforce mode and all applications of the system accessed over the network shall have their security profile activated therein
j) be enabled for automatic log-out after a defined period of user inactivity
k) in the case of the Linux operating system, have the Linux Audit framework activated. Additional specific rules for Audit (e.g. tracking access to configuration files) may be implemented during the Site Acceptance Tests phase of the SAT
l) be time synchronized with a designated local NTP server
m) be supplied with up-to-date versions of their software for all HW components
n) for all passwords for their firmware to be set to values that meet the strong password parameters, see point TS_4.1_3
o) allow monitoring of the CPU, memory and disk space load of the system. It should generate a notification to the system administrator if the defined load values are exceeded.

5.4. *Logging*

TS_5.4_1 Delivered Solution shall:

a) provide sufficient disk capacity for storing system and application logs for a period of not less than 6 months
b) ensure that access rights to log files are limited to a minimum
c) allow for configuration settings to integrate application logging into the operating system logger framework (e.g. syslog for Unix/Linux-based solutions)
d) be enabled at the operating system level to generate log messages containing information on events such as successful and unsuccessful attempts to log a user into the system, attempts to escalate privileges, stop/start a service, create/remove a user or a group of users

e) be configured to send system and application logs for selected message categories in syslog, Windows Event Forwarding (WEF) or Microsoft Security Event (MSE) transfer mode to an external log server

5.5. *Application requirements*

5.5.1. Application login process

TS_5.5.1_1 If the application implements its user database and authentication process for logging into the application, the application shall:
a) ensure that no identifiers are displayed during login until the login process is complete
b) ensure that a warning text can be set for unauthorized use of the application (e.g. before the user logs into the application)
c) ensure that no help information is displayed during the login process. In the event of an unsuccessful login, the application must not indicate which part of the login credentials is incorrect
d) ensure that no password text is displayed when entering the password
e) ensure that after a defined period of inactivity the user is automatically logged out (idle timeout)
f) ensure that after a defined number of unsuccessful login attempts the user's account is locked.

TS_5.5.1_2 If the application implements its user database and authentication process for logging into the application, the application should ensure that the date and time of the previous successful login is displayed after logging in.

5.5.2. Application user passwords

TS_5.5.2_1 If the application implements its user database and authentication process when logging into the application, the application shall:
a) allow all users to set their own passwords
b) allow periodic password changes and set a time interval to force a password change
c) require the old password to be entered when changing the password
d) require a new password to be entered twice when changing the password.
e) use standard and secure hash algorithms to store passwords
f) have the passwords of all system accounts set to values that meet the parameters of a strong password.

TS_5.5.2_2 If the application implements its user database and authentication process when logging into the application, the application should require a password change after the first login.

5.5.3. Logging

TS_5.5.3_1 The application shall record the following events in its logs:
- start or restart of the application with information about the software version of the running application and the loaded configuration files
- In case the application implements its user database and authentication process when logging into the application, the application must record the following events in its logs:
    - successful and unsuccessful user logins and logouts to the application
    - the successful and unsuccessful creation, modification or deletion of a user or group
    - a user request to change a password in the application

TS_5.5.3_2 The application should record the following events in its logs:

- application configuration changes
- error and other major application events

TS_5.5.3_3 The application log entry should contain the following fields:
- Type or code of activity/action (e.g. authorization, create, update, delete, accept network connection request, etc.)
- Subsystem performing the activity (e.g. process name or identifier, transaction)
- Identifiers of the entity on which the activity was performed (e.g. user name, computer name, IP address, MAC address, etc.)
- Identifiers of the object on which the activity was performed (e.g. file names, table record identifier, user name, computer name, IP address, MAC address, etc.)
- Change (parameter value before and after the activity was performed)
- Date and time the action was performed, including relevant format and time zone information if not in coordinated world time
- Activity success result (e.g., whether the activity was performed or rejected)
- Description/reason code for the rejection of the activity

5.5.4. Application network profile

TS_5.5.4_1 The solution shall have a documented list of the network communication used with details of the network protocols used (TCP/UDP ports, etc.)

5.6. *Requirements for the operation in the LPS SR environment*

TS_5.6_1 The delivered solution shall be able to install and activate published operating system security updates. In the event that a security update to the operating system would render the application inoperable, the supplier of the solution shall ensure that the necessary modifications to the application are made to enable the published security update to the operating system to be installed and activated. The timeframe for installation and activation of the security update is subject to agreement between the supplier and the LPS SR.

TS_5.6_2 The delivered solution shall allow for the installation and activation of published security updates of third-party software components (sw libraries) used in the application. In the event that a security update of these components would render the application inoperable, the supplier of the solution must ensure that the necessary modifications to the application are made to allow the published security update of the components to be installed and activated. The timeframe for installation and activation of the security update is subject to agreement between the supplier and the LPS SR.

TS_5.6_3 The delivered solution shall allow for migration to a higher version of the operating system in the event that the currently used version of the operating system is no longer supported by the operating system manufacturer and vulnerabilities are published in that version for which security updates no longer exist. In the event that upgrading to a higher version of the operating system would render the application non-functional, the solution provider must ensure that the necessary modifications to the application are made to enable the upgrade to the higher version of the operating system. The timeframe for installation and activation of the new version of the operating system is subject to agreement between the supplier and the LPS SR.

TS_5.6_4 The delivered solution shall provide security updates for application vulnerabilities identified by the supplier itself as part of its internal security analyses. In the event that a security update would render the application inoperable, the supplier of the solution shall ensure that the necessary modifications to the application are made to enable the application security update to be installed and activated. The timeframe for installation and activation of the security update is subject to agreement between the supplier and the LPS SR.

TS_5.6_5 The distribution of application security updates shall be done in a secure manner, through a communication channel that ensures verification of the integrity and authenticity of the update.

TS_5.6_6 The delivered solution shall allow to install and activate published security updates for the software of HW components (servers). In the event that a security update for these components would render the application inoperable, the solution supplier must ensure that the necessary modifications to the application are made to allow the published security update for the components to be installed and activated. The timeframe for installation and activation of the security update is subject to agreement between the supplier and the LPS SR.

6. Support

6.1. *Service Level Agreement*

TS_6.1.1_1 Service Level Agreement (SLA), meaning the provision of post-warranty service, will be concluded for a period of 2 years. The start date will commence on the date of signing the FA protocol, after the end of the warranty period.

TS_6.1.1_2 The Contractor undertakes that each person performing maintenance and repairs on the systems under the contract has and maintains adequate knowledge of the provision of air navigation services, the actual and potential impacts of their work on flight safety and air navigation services, as well as relevant operational restrictions that apply to such activities to the extent required by Commission Implementing Regulation (EU) No. 2017/373. This regulation sets out common requirements for providers of air traffic management (ATM)/air navigation services (ANS) and other ATM network functions, repealing Regulation (EC) No. 482/2008, Implementing Regulations (EU) No. 1034/2011, (EU) No. 1035/2011, and (EU) 2016/1377, and amending Regulation (EU) No. 677/2011 (hereinafter referred to as "Regulation 2017/373") in accordance with the provisions of ATM/ANS.OR.B.015, letter a).

6.2. *Remote Repair*

Remote repair means that the Contractor will connect to the system in order to analyze the reason of the problem, to develop bug fixes (in the case of a real SW fault) and after coordination with the LPS staff, to implement them into the system or recommend operational procedures to prevent the problem from happening again.

TS_6.2_1 The Central RCMS system shall be able to provide remote access for Contractor's remote connection (Remote Desktop). LPS provides a remote logging service for VPN clients.

TS_6.2_2 The Contractor shall connect to the system and propose corrective action on request. LPS staff will supply a password to the Contractor for the logging procedure via firewall on VPN.

TS_6.2_3 Once LPS staff has been contacted, the Contractor's staff shall continue with their analysis / corrections / recommendations until the system is operational again, unless the problem has been caused by hardware malfunction.

TS_6.2_4 The Contractor shall be fully responsible for any data losses caused by remote logging.

6.3. *Mandatory Spare Parts set*

TS_6.3_1 The Contractor shall include in its offer a mandatory set of spare parts. The set of mandatory spare parts shall contain:

- Two (2) VHF transceiver;
- Two (2) VHF transmitter;
- Two (2) VHF receiver;
- Two (2) RF switch (relay) for TX and switch for antenna;
- Two (2) RF switch/coupler/hybrid for receiver
- Two (2) VHF Band-Pass Filter type 1;
- Two (2) VHF Band-Pass Filter type 2;

- Two (2) VHF Stop-Pass Filter;
- Two (2) 2-port Combiner/Starpoint;
- Two (2) 3-port Combiner/Starpoint;
- Two (2) 4-port Combiner/Starpoint;
- Two (2) VHF RF Power Meter;
- One (1) UHF RF Power Meter;
- Two (2) IO Extender;
- Two (2) Sensors AC and DC power supply, temperature and door lock,
- One (1) VHF multicoupler – 16 channel;
- One (1) VHF multicoupler – 8 channel;
- One (1) UHF multicoupler – 8 channel;
- One (1) Site_RCMS_WS (with SW installation);
- One (1) Supervisor_RCMS_PC (with SW installation);
- One (1) Central_RCMS_Server (with SW installation);
- One (1) LCD display for Central RCMS system.

TS_6.3_2 The offered mandatory set of spares shall be of the same type/model/version as the equipment installed.

TS_6.3_3 The set of mandatory spare parts is a mandatory part of the delivery of the system. The Contractor shall deliver a set of mandatory spare parts to LPS, in the quantity and quality which is in accordance with Contract requirements, at the latest before the start of SAT for first radio site. These spare parts shall be inspected and tested (except for consumables) during the Site Acceptance Test.

6.4. *Additional Spare parts*

TS_6.4_1 The Contractor shall submit a set of spare parts in its tender documentation, in a form of the Spare Parts List which shall contain all parts with a price for each individual item. These spare parts are not included in the delivery of the system. LPS will request these parts by individual orders.

TS_6.4_2 The Spare Parts List shall contain the following data for each spare part:

- Manufacturer Name;
- Part Number (P/N);
- Spare Part Description;
- price;
- Quantity of parts to be installed in the system;
- MTBF, MTTR of each part.

TS_6.4_3 The Contractor shall guarantee the shortest DT (delivery time) possible for parts that will be additionally ordered by LPS, which shall be less than 90 calendar days.

TS_6.4_4 The Contractor shall notify LPS if the delivery of a particular type of spares is becoming difficult or if that particular part is not manufactured anymore. Such notification accompanied by a spare parts replacement proposal shall be given at least 6 months in advance.

6.5. *Warranty and Post Warranty Service*

Warranty and conditions of warranty and post-warranty service are described in the Business Terms and Conditions in the Tender Documentation.

TS_6.5.1_1 Under the warranty conditions, the Contractor shall ensure that the operational downtime is in compliance with the Availability, MTTR and MTBF specified in this Technical Specification.

TS_6.5.1_2 Where complex system faults are identified, the project managers shall reach an agreement regarding a suitable location for troubleshooting and regarding deadlines.

TS_6.5.1_3 The rectification of faults and any other work performed on accepted operational procedures shall be carried out in compliance with LPS's internal work instructions.

TS_6.5.1_4 In the case of any software deficiency/defect, a report (including a version of SW items) describing the nature of the deficiency/defect, the cause and the corrective measures taken, shall be prepared by the Contractor and submitted to LPS.

7. Technical System Documentation

7.1. *Project Documentation*

TS_7.1_1 The documentation shall be in Slovak or English.

TS_7.1_2 The system documentation shall consist of:

- Hardware documentation;
- Software documentation;
- Operational user manual;
- Training documentation;
- Site installation documentation.

TS_7.1_3 Final versions of the system documentation shall be furnished in 3 hard copies and 1 copy on electronic media.

TS_7.1_4 The system documentation shall be written and printed in accordance with either ISO A4 or ISO A3 format standards. All drawings shall be documented in a commonly available CAD utility.

TS_7.1_5 The Contractor shall specify a list of all system documentation, detailing reference numbers, description of the documentation and delivery milestones in relation to project milestones (Contract Signature, FAT, delivery, SAT, etc.)

TS_7.1_6 The Contractor shall supply COTS documentation i.e. a set of technical documents of the system hardware and software units, provided by the manufacturer of COTS products (such as workstations and servers). These documents shall be delivered in the same quantity as the system documentation.

TS_7.1_7 Any defects, misunderstandings, inadequate or incomplete descriptions and other findings in the documentation which compromise the quality of the documentation and/or influence the usability of the documentation for planned purposes shall be corrected without any extra costs to LPS.

TS_7.1_8 All documentation to be delivered shall be issued in their final versions and provided to LPS prior to signing the FPA Protocol.

TS_7.1_9 The documentation shall include the following:

- Colocation analysis with calculation of intermodulation products;
- Equipment description;
- Equipment block diagram;
- Unit layout in cabinets and cabinet wiring;
- Detailed description and purpose of each unit;
- Interconnections within units;
- Wiring and assembly diagrams;
- Fault finding diagrams;
- Setting-up and operating procedures;
- Preventive maintenance and its procedures;
- Corrective maintenance and its procedures;
- Specification of all equipment units with part numbers, serial numbers and names of manufacturers;
- Other information necessary to perform regular and preventive maintenance.

TS_7.1_10 Software documentation (e.g. the Software User Manual or equivalent and the Version Description Document or equivalent) shall contain a description of the system software and shall comprise sufficient details to permit full understanding and maintenance of the system. Special care shall be taken how to install OS, firmware and RCMS application and configure upgrades and licenses on servers, workstations, computers and other equipment based on the software.

TS_7.1_11 The documentation shall provide guidelines for the technical staff to:

- Understand the equipment function in detail;
- Perform preventive and corrective maintenance of the equipment;

- Troubleshoot the system;
- Install and configure any HW equipment in the case of a complete equipment failure or malfunction;
- Install OS and RCMS application and configure upgrades and licenses on servers, workstations and computers in the case of a complete equipment failure or malfunction;
- Perform all necessary measurements and adjustments.

7.2. *Documentation of Legal Requirements of the European Union*

7.2.1. Interoperability

The role of the Supplier, or its authorized representative established in the Community (in this case the Contractor), is to ensure and declare compliance of its EATMN constituent with the essential requirements, specific requirements contained within the relevant implementing rules for interoperability and other relevant technical specifications (e.g. Community specifications, standards). The purpose of the following requirements is to ensure that the procured and implemented system is compliant by all means with the requirements laid down in The Interoperability Regulations.

TS_7.2.1_1 For VHF system the Contractor shall deliver Manufacturer Summary of Compliance of an EATM Constituent taking into account requirements from the following documents:
- EC regulations 2018/1139
- Commission Implementing Regulation (EU) 2017/373
- Commission Delegated Regulation (EU) 2023/1768
- Commission Delegated Regulation (EU) 2023/1769
- Detailed Specifications and Acceptable Means of Compliance & Guidance Material for certification or declaration of design compliance of ATM/ANS ground equipment (DS-GE.CER/DEC)

TS_7.2.1_2 The Contractor shall submit to the Customer, without undue delay after its issuance by the EASA Agency, a document approving the organization involved in the design or production of the delivered equipment, in accordance with Commission Implementing Regulation No. 2023/1769. This regulation establishes technical requirements and administrative procedures for the approval of organizations involved in the design or manufacture of air traffic management/air navigation services systems and components and amends Implementing Regulation (EU) No. 2023/203 (hereinafter referred to as "Regulation 2023/1769").

TS_7.2.1_3 In accordance with Article 4 of Commission Delegated Regulation No. 2023/1768, establishing detailed rules for the certification and declaration of air traffic management/air navigation services systems and components, the Contractor shall, without undue delay after its issuance, submit to the Customer a certificate for the delivered equipment constituting the work or part thereof, as issued by the EASA Agency under Article 4, paragraph 2 of Regulation 2023/1768.

TS_7.2.1_4 The Contractor shall attach to the certificate documentation containing references to detailed specifications issued by the EASA Agency as means of demonstrating compliance of the design of the delivered equipment constituting the work or part thereof with the essential requirements set forth in Article 40 of Regulation (EU) 2018/1139 of the European Parliament and of the Council on common rules in the field of civil aviation. This regulation establishes the European Union Aviation Safety Agency and amends Regulations (EC) No. 2111/2005, (EC) No. 1008/2008, (EU) No. 996/2010, (EU) No. 376/2014, and Directives 2014/30/EU and 2014/53/EU, and repeals Regulations (EC) No.

552/2004, (EC) No. 216/2008, and Council Regulation (EEC) No. 3922/91, as well as other relevant delegated or implementing legal acts.

TS_7.2.1_5 The Contractor shall also attach documentation containing all other conditions, deviations, and limitations on the operation and use of ATM/ANS equipment, as well as any special conditions issued by the EASA Agency.

TS_7.2.1_6 For the avoidance of any doubt, it applies that all costs associated with the issuance and submission of the relevant documents are fully included in the contract price, and there will be no adjustment to the contract price due to the issuance or submission of these documents under this contract.

TS_7.2.1_7 The Contractor undertakes to submit the relevant documents to the Customer by no later than 12.09.2028.

TS_7.2.1_8 In the event of the Contractor's failure to submit the relevant documents to the Customer properly and on time, the Customer shall have the right to claim a contractual penalty of 2 000 EUR for each commenced day of delay in fulfilling this obligation. The Customer shall also have the right to withdraw from this contract. In the event of the Customer's withdrawal from the contract, the Contractor shall not be entitled to any compensation for damages.

TS_7.2.1_9 With reference to the Directive 2014/30/EU of the European Parliament and of the Council of 26 February 2014 on the harmonization of the laws of the Member States relating to electromagnetic compatibility, laying down requirements on the Electromagnetic Compatibility (EMC), as amended by the Regulation (EU) 2018/1139 and (EU) 2021/1087 of the European Parliament and of the Council, a related declaration shall be submitted in the Tender and delivered by the Contractor for the supplied system.

TS_7.2.1_10 With reference to the Directive 2014/35/EC on the harmonization of the laws of the Member States relating to the making available on the market of electrical equipment designed for use within certain voltage limits (low voltage directive – LVD) a related declaration shall be submitted in the Tender and delivered by the Contractor for the supplied system.

TS_7.2.1_11 With reference to the Directive 2014/53/EU on the harmonization of the laws of the Member States relating to the making available on the market of radio equipment (RTT), as amended by the Regulation (EU) 2018/1139 and (EU) 2021/1087 of the European Parliament and of the Council, a related declaration shall be submitted in the Tender and delivered by the Contractor for the supplied system.

TS_7.2.1_12 No later than 2 months before the start of the verification operation at the first site, the contractor shall provide the supporting documents for the declaration of conformity in the form of a completed Annex No. 1 – “Supporting Documents for the Statement of compliance”. The Annex must be completed by the design and manufacturing organization responsible for designing and producing the system and its components, in accordance with the introductory provision (14) of Commission Delegated Regulation (EU) 2023/1768, which lays down detailed rules on the certification and declarations concerning air traffic management/air navigation services (ATM/ANS) systems and ATM/ANS constituents.

7.2.2. Safety Assurance

These ATM and program related applicable standards/regulations/directives (and any amendments of documents released before the establishment of the contractual relationship in which this document is referenced) are applicable for software safety assurance:

- Annex IV to ED Decision 2019/022/R of 30 Oct 2019 establishing a software safety assurance system to be implemented by air navigation service providers and
- as a means of compliance with Annex IV to ED Decision 2019/022/R ED-153/Eurocae GUIDELINES FOR ANS SOFTWARE SAFETY ASSURANCE.

TS_7.2.2_1 The Contractor shall submit a Safety Management Plan. This document shall be reviewed in accordance with comments provided by LPS after the Contract has been signed. Special attention shall be paid to software safety assurance.

TS_7.2.2_2 With reference to ED 153 and based on FAT results, the Contractor shall submit and deliver documents demonstrating fulfilment of the software safety requirements at least two months before the Operation Verification for the first radio site.

TS_7.2.2_3 The safety documentation shall be provided to LPS for review and approval in accordance with the milestones specified in the Documentation Plan.

TS_7.2.2_4 Relevant documentation for software development and verification corresponding to the software assurance level shall be a part of delivery in the case that the EU legislation has been updated during the time of delivery and operation of the particular equipment (particularly in relation to the Commission Implementing Regulation (EU) 2017/373).

TS_7.2.2_5 A statement that procedures related to the designated SWAL have been applied in the software design, manufacturing, verification, validation and documentation for the system shall be delivered by the Contractor. Software should be developed with an assurance level that is commensurate with the severity of the effect of failure. The software portability specification or equivalent should provide all the features required by the target hardware to ensure that software can run correctly.

TS_7.2.2_6 As a part of the SAT documentation the Contractor shall submit a Compliance Matrix of software assurances according to applicable EC Regulations and EUROCAE standards (ED-153 or an adequate standard with compliance matrix in relation to ED-153) in the process of software development.

TS_7.2.2_7 The Contractor shall produce evidence and arguments demonstrating that:

- the software safety requirements correctly state what is required for the software in order to meet safety objectives and requirements as identified by the risk assessment and mitigation process;
- traceability is addressed in respect of all software safety requirements.

TS_7.2.2_8 To assure software safety requirements validity, the Contractor shall describe the functional behavior of software in nominal and downgraded modes, timing performances, capacity, accuracy, software resource usage on the target hardware, robustness to abnormal operating conditions and overload tolerance, as appropriate.

TS_7.2.2_9 The software safety requirements shall be complete and correct, and compliant with the system safety requirements.

TS_7.2.2_10 To assure the software safety requirements verification, the Contractor shall ensure the following:

- The software functional behavior, timing performances, capacity, accuracy, software resource usage on the target hardware, robustness to abnormal operating conditions and overload tolerance shall comply with the software requirements;
- The software shall be adequately verified by analysis and/or testing and/or equivalent means;
- The software verification shall be correct, complete and documented.

TS_7.2.2_11 To assure the software safety requirements traceability, the Contractor shall ensure that:

- Each software safety requirement is traced to the same level of design at which its satisfaction is demonstrated;
- Each software safety requirement, at each level in the design at which its satisfaction is demonstrated, is traced to a system safety requirement.

TS_7.2.2_12 For any software (such as COTS, non-developmental software or previously used software, etc.) for which some of the requirements cannot be applied, the Contractor shall provide, through other means, the same level of confidence as the relevant software assurance level whenever defined.

TS_7.2.2_13 Those means shall give sufficient confidence that the software meets the safety objectives and requirements as identified by the safety risk assessment and mitigation process.

TS_7.2.2_14 Documents related to software assessments (safety documentation) shall be delivered before SAT testing.

TS_7.2.2_15 In the case that the software alone is used for any safety-critical functions, software assurances according to applicable EC Regulations and EUROCAE standards shall be submitted as a part of the software documentation.

TS_7.2.2_16 If software is not used for any safety-critical functions, it shall be confirmed in a manufacturer's statement.

7.3. *RAM (Reliability, Availability, Maintainability)*

7.3.1. General

Reliability, Maintainability and Availability are characteristics of the overall system which shall be specified, designed, implemented, tested, validated and documented.

Quality of equipment can be understood as its ability to satisfy the user needs for the specified period of time and it can be expressed with its operational availability. Major contributors to the quality are Reliability and Maintainability.

TS_7.3.1_1 The methodology, technique, processes and tools the Contractor intends to use to achieve the specified RAM objectives shall be described or referenced in specific plans addressing architecture, hardware and software aspects.

7.3.2. Reliability

Reliability is defined as a probability that equipment will perform its intended function without any errors, under stated conditions, and for a specified period of time.

TS_7.3.2_1 The Contractor shall provide in the system documentation a reliability model consisting of reliability block diagrams covering all functions of the system.

TS_7.3.2_2 The MTBF and MTTR in hours and the availability shall be clearly shown in either a block diagram or a list showing the equipment breakdown to the functional unit level, with identification of a specific common failure mode (e.g. switch over equipment).

TS_7.3.2_3 The Contractor shall provide in the system documentation reliability predictions and analysis as per standard MIL-HDBK-217 or any other commonly used and accepted method which shall be clearly stated.

7.3.3. Maintainability

Maintainability is the degree of the ability of an item to be retained in or restored to a specified condition when maintenance is performed by personnel having specified skill levels, using prescribed procedures and resources, at each prescribed level of maintenance and repair. MTTR is the sum of corrective maintenance times at any specified level of repair, divided by the total number of failures within an item repaired at that level, during a particular period of time and under stated conditions.

TS_7.3.3_1 The Contractor shall provide in the system documentation the MTTR estimates and prediction for each of the following:
- Line Replaceable Unit (LRU);
- Each major equipment group;
- Each single channel of the system.

TS_7.3.3_2 The Contractor shall state in the system documentation the average turn-around time (TAT) for a Line Replaceable Unit (LRU).

7.3.4. Availability

For the purpose of this specification, Availability is defined as a ratio of the total time the system is capable of performing its mission and the time period for which it is required to perform that mission, expressed as a percentage. The availability calculation excludes all planned downtimes.

The figures for Availability quoted in this Specification are for Operational Availability (AO) and they shall be calculated using the following equation:

$$\mathbf{Ao} = \frac{\mathbf{MTBF}}{\mathbf{MTBF} + \mathbf{MTTR} + \mathbf{MRT}}$$

MTBF = Mean Time Between Failures in hours.
MTTR = Mean Time To Repair in hours.
MRT = Mean Response Time in hours (i.e. the average time from a notification of a failure for a technician to be ready to commence a repair action).

The proposed Radio System will be considered as failed or unavailable when one or more radio frequencies are not available per radio site.

TS_7.3.4_1 The lifetime of the Radio System shall be not less than 15 years or 130,000 hours of operation.

TS_7.3.4_2 The estimated value of Operational Availability of the Main/Stby radio at radio site shall be not less than 99.9938%.

TS_7.3.4_3 The estimated value of MTBF of the System shall be not less than 40.000 h.

TS_7.3.4_4 All calculations shall be provided to indicate the system´s ability to meet the requirements, including a comprehensive explanation of all assumptions.

8. Training

System hardware and software training is required for technical staff of LPS

TS_8_1 The Contractor shall submit in its offer an initial version of the Periodical Training Plan. The Plan shall consists of:
- Training 1 for first group of 5 administrators in duration 10 days before FAT,
- Training 2 for second group of 5 administrators in duration 10 days before FAT,
- Training 3 for first group of 6 technicians in duration 5 days before installation,
- Training 4 for second group of 6 technicians in duration 5 days before installation,

TS_8_2 The Plan shall be discussed in detail with the Contractor and approved by LPS in accordance with the agreed schedule.

TS_8_3 A schedule for the training course(s) shall be defined after the Contract has been signed.

TS_8_4 The trainings shall be carried out in Contractor's training facilities.

TS_8_5 Administrators shall be trained prior to FAT (Factory Acceptance Test) to be able to take part in the Factory Acceptance Tests held in the Contractor's training facilities (Factory Training) for 5 persons in two groups.

TS_8_6 The technician staff shall be trained prior to installation at the first radio site. This training shall be carried out for 6 persons in two groups of operational staff.

TS_8_7 The Contractor shall offer training intended for the system and maintenance staff experienced with similar systems.

TS_8_8 The Training shall address all the hardware and software delivered in the scope of the Contract which means that the training for installation, maintenance and operation of COTS products shall be included in the Training Plan.

TS_8_9 The training language shall be English or Slovak.

TS_8_10 All instructors engaged in the training shall be fluent in English or Slovak, qualified, skilled, shall have excellent knowledge of the system and shall be experienced trainers.

TS_8_11 The content of the training course(s) shall be included in the Training Plan and shall be approved by LPS.

TS_8_12 Training material in an electronic form shall be made available for trainees at least 1 week before the course begins. Paper copies of the training material shall be available for trainees at the time the course begins.

TS_8_13 LPS shall have the right to use such material for further courses within its own organization.

TS_8_14 The Training shall include theoretical education together with the elements of practical training.

TS_8_15 After the completion of the course, a Certificate of competence shall be provided to LPS for each student who has successfully completed the course.

TS_8_16 Training program for administrators shall explain the theory, but mainly it shall be practically focused in order to gain practical skills in sufficient and detailed level. Program shall at least consist of:
- Radio device training (RX, TX, TRX): theory of operation explained over block-schemes of radio, front and back panels, functions, menus, adjustments, connections/integration/installation, practical tips etc. Practical "hands-on" training is required.
- Radio firmware upgrade – practical training how to upload new firmware into radio
- Theory for Starpoint, Multicouplers, Cavity Filters, and Power meters training: theory of operation, block-schemes, functions, adjustments, connections/ integration/ installation, practical tips… etc. **Practical "hands-on training" for each equipment is required.**
- RCMS training (theory and hands-on):
  - installation of operating system on clean server, workstation, PC
  - installation of RCMS application on server, workstation, PC
  - installation of licensees on all relevant equipment

- installation of new version of firmware on equipment based on software
- how to add new radios and how to add new radio site into RCMS
- detailed description of all HW & SW,
- troubleshooting, functions, menus, applications, site/equipment management, user/password management, etc;

- 19'' equipment cabinets: explained over detail schemes for cabling installation, wiring and cabling, equipment fitting and connecting, AC/DC power distribution and cabling, grounding and fusing, EMP protection, etc;
- RF isolation techniques Tx/Tx and Tx/Rx using filters –band pass, stop pass and isolators,
- Intermodulation – how to calculate and how to practically eliminate,
- Impact of a Tx/Rx frequency change (re-tuning) on filters, couplers and critical length cables in various examples for VHF and UHF band;
- Cable phase matching theory and methodology (calculations and measurements);
- Cable phase matching techniques, usage of tools and instruments.

TS_8_17 Practical part of RCMS training shall include a full installation of the software on "clean" hardware without an OS. Full installation means the installation of the OS, RCMS application, necessary upgrades, drivers, licenses and necessary configurations. At least two servers, workstation and PC must be prepared for practical training for administrators. Administrators shall be able to set up a fully functional RCMS on new servers, workstations and PC without vendor intervention. This requirement has the higher priorities during FAT tests.

TS_8_18 The Factory Training focused on multicoupler-filter systems shall be provided by a trainer-expert in multicoupler-filter.

TS_8_19 The Contractor shall prepare all necessary training documentation, practical exercises as well as the tools and instruments for the practical hands-on training. Network analyzer is necessary.

TS_8_20 The multicoupler-filter system tuning/cable phase matching training should take at least 3 working days.

TS_8_21 Training program for technicians shall explain the theory and shall be practically focused in order to gain practical skills how to use radios in operation. Program shall consist of:

- Radio device training (RX, TX, TRX): theory of operation, block-schemes, front and back panels, functions, menus, adjustments, connections/ integration/ installation, practical tips etc;
- Dividers, Multicouplers, Cavity Filters, and VSWR meters training: theory of operation, block-schemes and functions;
- RCMS training: troubleshooting, functions, menus and applications.

TS_8_22 In addition to the specific requirements for administrators and technicians training, both groups shall be trained to:

- Understand the equipment architecture and configuration;
- Understand operational functions and features of all equipment units;
- Understand and use system software application(s) which are a part of the delivered equipment;
- Perform preventive maintenance of the equipment;
- Perform corrective maintenance, i.e. troubleshoot the system down to the LRU and SRU (where applicable) levels;
- Perform system test and alignment procedures for LRU/SRUs;
- Perform required measurements and adjustments and be able to use all necessary tools and instruments;
- Understand the diagnostic and test utilities and procedures.

9. Project Management

9.1. *General*

TS_9.1_1 The Contractor shall be responsible for management, performance, monitoring and coordination of the whole project from the project kick-off until completion of the Contract.

TS_9.1_2 The Contractor shall establish project organization in accordance with the requirements included herein, having necessary resources, qualified staff with experience to fulfil all their obligations.

TS_9.1_3 The Contractor shall define and describe the part of its organization which will manage or be involved in the project.

TS_9.1_4 The Contractor shall appoint a Contractor's Representative who will be an interface to the LPS's Project Manager and who will be at the LPS's disposal for all matters relating to the Contract execution.

TS_9.1_5 Is another person acts as their substitute, LPS shall be notified at least 1 week in advance of the other person proposed to substitute them.

TS_9.1_6 The Contractor's Representative (or their substitute) shall be present at all meetings during the Contract execution.

TS_9.1_7 The Contractor's Representative shall be responsible for project co-ordination and shall take all necessary action to ensure the progress of the project according to the agreed schedule.

TS_9.1_8 If deemed necessary during Contract execution, LPS or the Contractor may propose progress meetings. The agenda of this meeting(s) shall be mutually agreed and prepared at least 3 working days prior to the date of the meeting.

TS_9.1_9 The following persons shall be present at progress meetings:

- the Contractor's Representative;
- the LPS's Project Manager;
- any other persons who the above-mentioned representatives consider important to be present.

The venue of the meetings shall be mutually agreed.

TS_9.1_10 The Contractor shall prepare minutes of the meeting and submit them for approval to LPS not later than 3 working days after the meeting finishes.

TS_9.1_11 The Contractor shall issue and manage a Progress Chart (Master Time Schedule). The Contract shall be executed in accordance with the Progress Chart. This Chart shall be set out in the form of a linear timetable (preferably using MS Project). The starting date is to be the date when the Contract enters into force.

TS_9.1_12 The Progress Chart will specify dates of all major actions and decisions to be taken by both LPS and the Contractor. Any alterations to this Chart need to be examined and mutually agreed.

TS_9.1_13 The initial Progress Chart shall be submitted to LPS no later than two weeks after the Contract has been signed. The Progress Chart shall be agreed upon between the Contractor and LPS and shall be kept updated during the Contract execution.

TS_9.1_14 The Contractor shall establish close coordination with LPS for the development of all planning activities related to the project, forwarding relevant plans, procedures, etc. for review and approval, prior to putting them into force.

TS_9.1_15 The Contractor shall prepare at least the following Project Plans at the appropriate stage in the project for review and approval by LPS:

- Project Management Plan (PMP);
- Logistic Plan (LP);
- Documentation Plan (DP);
- Safety Assurance Plan (SAP);
- Training Plan (TP);
- Installation and Migration Plan (IP);

- FAT and SAT Plan and Procedures;
- Final Pre-Operational Acceptance Plan.

9.2. *Project Management Plan*

TS_9.2_1 The Contractor shall prepare a Project Management Plan (PMP) in Microsoft Project format .mpp in accordance with the requirements included in the present chapter.

TS_9.2_2 A draft version of the PMP shall be provided as a part of the system documentation. An initial official version of the PMP shall be issued not later than two weeks after the Contract has been signed.

TS_9.2_3 The Project Management Plan shall include at least the following:

- Project scope and overview;
- Management procedures and practices;
- Project deliverables (they shall also include a Documentation List);
- Work Breakdown Structure (it shall define the scope of work and resources necessary to meet the Contract requirements. The work breakdown shall also include any work to be performed by LPS, e.g. participation in reviews and tests, preparation of data, preparation of environment at radio sites to be upgraded.);
- Project organization and responsibilities;
- Master Time Schedule, showing dates and deliverables (Progress Chart);
- Master resource plan, showing roles and responsibilities;
- Configuration management activities (regarding hardware, software and documentation version changes);
- Key risks that might jeopardize the project.

TS_9.2_4 Any change to the PMP or to the processes outlined in it shall be subject to a formal LPS's approval. The PMP shall be shared with LPS in order to kept up-to-date.

9.3. *Logistic Plan*

TS_9.3_1 The Contractor shall prepare a Logistic Plan (or equivalent) which shall specify in more detail all logistic aspects of the Contract. The Logistic Plan shall include at least the transportation of all goods to the radio sites and planned storage.

TS_9.3_2 The Logistic Plan shall be issued in the Tender Documentation.

9.4. *Documentation Plan*

TS_9.4_1 A Documentation Plan shall specify the list of all documents to be delivered to LPS during Contract execution.

TS_9.4_2 An initial version of the Documentation Plan shall be issued not later than two weeks after the Contract has been signed.

TS_9.4_3 The Documentation Plan shall include at least the following:

- title of the document;
- Contractor;
- applicability of the document (e.g. entire system, a certain subsystem or a particular COTS product, hardware documentation, software documentation, etc.);
- reference and version number of the document;
- dates of each document delivery.

9.5. *Installation and Migration Plan*

Installation shall be planned in line with the rules stated below:

TS_9.5_1 Installation and SAT at radio sites shall not be performed during summer season due to a high number of air traffic movements. For this purpose, the summer season is defined as a period starting on 15 June and ending on 15 September. The Final Pre-Operation Verification and delivery of equipment to the radio sites may be performed during this period.

TS_9.5_2 The radio site ATCC should be installed in next order:

- ATCC
- Poprad-Tatry
- Košice

TS_9.5_3 Installation at next site shall be performed after successful SAT at previous site.

TS_9.5_4 Installation at radio sites shall not take longer than 5 working days. Site Acceptance Testing shall start immediately after successful installation and the Final Pre-Operational Verification shall start immediately after successful SAT.

TS_9.5_5 At each radio site where installation is going to take place, the Contractor shall prepare an Installation and Migration Plan comprising:

- Contractor's scope of work;
- sub-contractors involved and their scope of work (if applicable);
- LPS's scope of work;
- tasks to be performed and person(s) responsible for each task;
- timing of the tasks;
- documentation (e.g. instructions, specifications, drawings, interconnection diagrams and other relevant information for installation);
- other information important for the final installation.

TS_9.5_6 The Installation and Migration Plan for all radio sites shall be submitted at least 3 weeks before the start of installation/migration activities at the first radio site.

9.6. *Acceptance Test Plans and Procedures*

TS_9.6_1 The Contractor shall provide acceptance test plans and procedures (test specifications) for Factory Acceptance Testing and Site Acceptance Testing, including a detailed description of the proposed test techniques and procedures to verify all equipment parameters, together with a schedule for such tests. The following documents shall be provided:

- Factory Acceptance Test Plan and Procedures;
- Site Acceptance Test Plan and Procedures.

TS_9.6_2 The acceptance test plans and procedures (test specifications) shall contain at least the following:

- a schedule of the actions performed during testing of various parts of the equipment;
- forms of documentation of test results;
- the condition under which the tests shall be conducted and approved;
- a detailed description of the tests to be performed.

TS_9.6_3 The Contractor shall include a list of detail tests that LPS will focused and perform during FAT. LPS will supply a list of tests based on the contractor's request before preparation of test plans and procedures.

TS_9.6_4 The FAT Plan and Procedures shall be submitted to LPS at latest 4 weeks before the FAT. The document shall be reviewed by LPS and it shall be amended or changed if necessary, and approved by both parties 2 weeks before the FAT at the latest.

TS_9.6_5 The Site Acceptance Test Plan and Procedures shall be submitted to LPS not later than 4 weeks before the SAT, individually for each radio site. The document shall be reviewed by LPS and it shall be amended or changed if necessary, and approved by both parties 2 weeks before the SAT at the latest.

9.7. *Contractor requirements for power supply*

Prior to installation of the RCOM system, LPS will perform installation of new AC and DC power supply at all sites. The current power supply was designed for the existing technology and the current number of devices. The new system will have specific requirements for power supply.

TS_9.7_1 The Contractor shall submit "Requirements for Power Supply" to LPS not later than 1 month after the Contract has been signed. The document shall be prepared by a certified electric designer.

TS_9.7_2 The "Requirements for Power Supply" shall take into account the following conditions:

- AC power supply is the main power source for all equipment;
- DC power supply is just for backup in the case when AC is off;
- up to 6 simultaneously transmitting transmitters for ATCC;
- up to 2 simultaneously transmitting transmitters for the airports;
- the transmitting/pause ratio is 1/3;
- DC shall guarantee operation at least 4 hours.

TS_9.7_3 The "Requirements for Power Supply" shall clearly define the capacity of AC and DC power supply, maximum current after Power ON, current and voltage breakers and cables for each radio site depending on the specific number of new devices to be installed.

10. Installation and Migration

10.1. *Installation*

Existing backup radio system shall be kept into full operation until the new radio system will be put into the operation. This period will take at least 9 weeks (1week installation + 8 weeks verification). Prior to installation of the new system, the existing radio system need to be moved to the new place in order to provide free space for the new system. Installation of the new system will be placed at the same location as the existing system.

TS_10.1_1 Planning of the system installation and setting up shall be developed in close cooperation with LPS.

TS_10.1_2 The Contractor shall perform a site survey before the installation takes place in order to identify any necessary works to be performed, if deemed necessary.

TS_10.1_3 The Contractor shall perform installation at one radio site for not longer than 5 working days.

TS_10.1_4 The Contractor shall have a full responsibility for the system installation and setting up.

TS_10.1_5 The Contractor shall provide all necessary equipment, tools, etc., consumable as well as non-consumable, needed for the installation and setting-up.

TS_10.1_6 Installation at the sites shall be conducted by Contractor's skilled staff.

TS_10.1_7 Installation shall take into consideration all applicable local legislation rules and procedures.

TS_10.1_8 In the Installation and Migration Plan, the Contractor shall specify all aspects of installation to be included in the documentation concerning:

- cabling arrangements, routing, identification;
- EMC compatibility, Interference, susceptibility to foreign radio frequencies;
- earthing arrangements;
- equipment mounting, cooling, etc.

TS_10.1_9 The Contractor shall specify all facilities and procedures necessary for the installation.

TS_10.1_10 The Contractor shall organize a pre-installation meeting in order to brief on all activities and responsibilities for individual actions during installation given in the Installation and Migration Plan.

10.2. *Migration on new system*

TS_10.2_1 Migration to the new system shall be performed in a way that the functionality of the existing equipment is not significantly endangered at any moment in order to avoid/minimize any interruption in provision of operational services.

TS_10.2_2 The Contractor shall conduct transition activities according to local rules, procedures and the current situation (unexpected problems or issues: complex air situation, degradation of connected systems, etc.) as well as according to conclusions stressed out in the dedicated LPS's transition safety assessment document. This may sometimes affect the working time and transition duration as well.

11. Testing and Acceptance

11.1. *Factory Acceptance testing*

TS_11.1_1 Factory acceptance testing shall be performed to verify that the equipment fully complies with the specification requirements. Any non-complying equipment shall be rejected.

TS_11.1_2 Factory acceptance tests shall be performed in the presence of the LPS's representative(s), unless decided otherwise.

TS_11.1_3 All factory acceptance tests shall be carried out on the basis of a test specification submitted to LPS by the Contractor at least 4 weeks before the FAT.

TS_11.1_4 The Contractor shall provide a test specification (FAT Plan and Procedures) including a detailed description of the proposed test techniques and procedures to verify all equipment parameters, conditions under which the tests shall be conducted and approved, forms of documenting test results, together with a schedule for such tests.

TS_11.1_5 All equipment and sub-units shall be fully interconnected and built up into a complete system configuration. Any tests considered as impracticable within the given system configuration shall be performed using simulated inputs/outputs or a test bench when specifically approved by LPS.

TS_11.1_6 The Contractor shall demonstrate during FAT the VoIP operation including real radio transmitters and receivers connected to real VoIP VCS or VoIP radio. The TX and RX shall be working in the Main/Standby operation. An artificial antenna for TX shall be connected via a switched relay and VHF generators for receivers shall be connected directly to receivers in line with the Figure below:

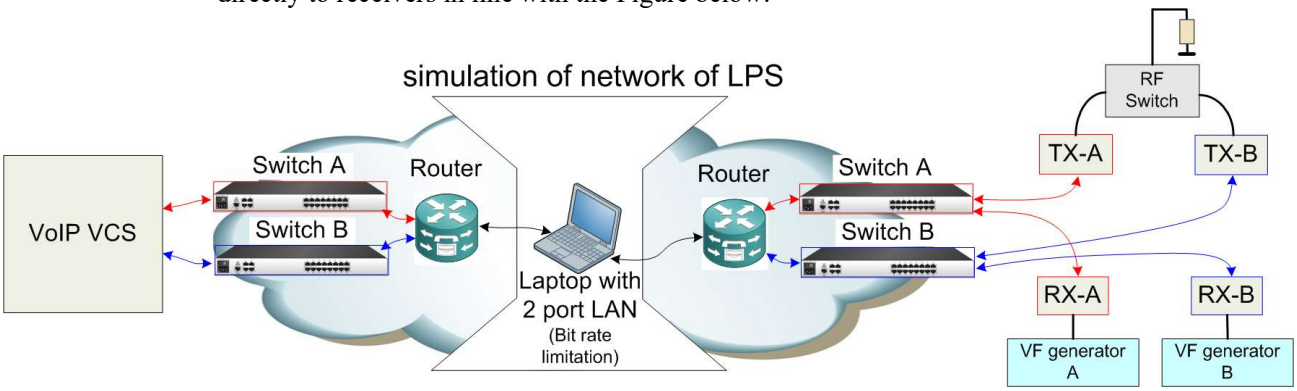

Figure 26 – Testing platform

TS_11.1_7 The Contractor shall demonstrate during FAT at least the following VoIP operation scenarios:

1) response of the system on any change of the jitter;
2) response of the system on any change of the delay;
3) response of the system on any change of the packet loss;
4) response of the system on any change of the band width using a band with a limiter;
5) SIP compatibility; and
6) switching from the switch A to B during an active VoIP transaction with active transmitting and receiving.

TS_11.1_8 All FAT procedures shall comply with and be performed according to the applicable standard documents, recommended practices or procedures (ICAO, ETSI, ITU, EUROCAE, CEI…).

TS_11.1_9 LPS reserves the right to require some further tests to be performed (which are not listed in the FAT specification), if deemed necessary. These tests shall also be noted in the FAT report.

TS_11.1_10 If a failure occurs during acceptance testing, the Contractor shall take any necessary remedial actions at its own expense, and all relevant tests shall be repeated unless LPS decides otherwise.

TS_11.1_11 After an unsuccessful FAT, a FAT Report shall be immediately prepared and issued by the Contractor. The FAT report shall be signed by both Contractor's and LPS's FAT representatives.

TS_11.1_12 After a successful completion of the FAT, a FAT Protocol shall be issued by the Contractor and signed by the LPS's Project Manager.

11.2. *Site Acceptance testing*

The purpose of Site Acceptance Testing is to demonstrate conformity of the delivered equipment and proper functioning of the system specified in the Contract. The SAT will be carried out site by site individually for each radio site.

TS_11.2_1 The SAT shall be carried out after the system installation at each radio site and on the Central RCMS system has been completed.

TS_11.2_2 The SAT for a particular radio site shall be performed immediately after installation has finished at the radio site.

TS_11.2_3 The SAT for the Central RCMS system shall be performed simultaneously with the first radio site.

TS_11.2_4 LPS reserves the right to request some further tests (site specific) to be performed (which are not listed in the SAT specification), if deemed necessary. These tests shall be also noted in the Site Acceptance Report.

TS_11.2_5 The Site Acceptance testing shall be performed in cooperation with Contractor's and LPS's representative(s).

TS_11.2_6 If a failure occurs during acceptance testing, the Contractor shall take any necessary remedial actions at its own expense, and all relevant tests shall be repeated unless LPS decides otherwise.

TS_11.2_7 The Contractor shall be responsible for providing all test equipment (hardware and/or software) necessary for the tests. The test facilities provided by the Contractor are not a part of the delivery.

TS_11.2_8 The Site Acceptance for a radio site will be successful, if the following conditions are satisfied:

- The inventory and a complete physical check of the goods received for the particular radio site have shown that the delivery fulfils the requirements listed in the Technical Specification in all aspects;
- The system has been installed correctly;
- All tests specified in the SAT Plan and Procedures have been successfully performed;
- The documentation has been supplied and it is in conformity with the real status at the site;
- The radio system and the Site RCMS system is working in compliance with the Technical Specification;
- The Central RCMS system has implemented all radios and other equipment at the particular radio site. The function of the Central RCMS system for the particular radio site is in compliance with the Technical Specification;

- All Certificates of Conformance and Suitability for use have been provided by the Contractor for all deliverable items including software according to paragraphs 1.4.1 and 1.4.2;
- all problems and observations in the Site Acceptance Report have been closed or a relevant action has been assigned and agreed.

TS_11.2_9 In the case of unsuccessful Site Acceptance Testing, a Site Acceptance Test Report shall be prepared and issued by the Contractor as soon as possible, in any case within 7 days. The Site Acceptance Report shall be signed both by the Contractor's and LPS's representatives and approved by the LPS's Project Manager.

TS_11.2_10 After successful completion of the SAT, the SAT Protocol shall be issued by the Contractor and signed by the LPS's Project Manager.

11.3. *Final Pre-operational Verification*

The purpose of a Final Pre-operational Verification is to make sure that the radio system at a radio site operates properly with stable and constant parameters.

TS_11.3_1 The Pre-operational Verification for a radio site shall start immediately after successful Site Acceptance Testing.

TS_11.3_2 The Pre-operational Verification for the first radio site shall be performed by LPS's users (air traffic controllers, technical staff) in a period of two months. The Pre-operational Verification for other sites shall be performed in a period of one month.

TS_11.3_3 The Pre-operational Verification of the Central RCMS system shall start simultaneously with Pre-operational Verification of the first radio site and finish simultaneously with the last radio site.

TS_11.3_4 The system shall demonstrate operational stability and proper functionality without occurrence of any major problems. If some major problems do occurs, verification shall stop and wait for repair. The verification may continue if the problem has been solved. Minor problems may occur without an impact on extension of the Pre-operational Verification time period.

List of major problems:

- hardware malfunction of servers, PC, radio, multicoupler, circulator, IO Extender, filters, RF Power Meter and other hardware in Technical Specification;
- communication problems caused by the system;
- functional error caused by the application software or operation system;
- system freeze caused by invalid parameters inserted by the operator or other sources; and
- erroneous radio transmission or reception.

TS_11.3_5 LPS reserves the right to require any other tests to be performed, if deemed necessary. These tests shall also be noted in the Pre-operational Verification Report.

TS_11.3_6 If a failure occurs during the Pre-operational Verification, the Contractor shall take any necessary remedial actions at its own expense.

TS_11.3_7 In the case of an unsuccessful Final Pre-operational Verification, a Final Pre-operational Verification Report shall be prepared by the Contractor based on the reported problems and observations sent by LPS's representatives. The Pre-operational Verification Report shall be issued as soon as possible, in any case not later than 7 days after the problems have been reported or after the verification has finished. The Final Pre-operational Verification Report shall be approved and signed by the LPS's Project Manager.

TS_11.3_8 The Pre-operational Verification for a radio site shall be successful, if all problems and observations in the Pre-operational Verification Report have been closed or any relevant action has been assigned and agreed.

TS_11.3_9 After a successful completion of the Final Pre-operational Verification for an individual radio site or for the Central RCMS system, the Final Pre-operational Acceptance Protocol shall be issued by the Contractor and signed by the LPS's Project Manager.

11.4. *Final Pre-operational Acceptance for the entire system*

The Final Pre-operational Acceptance for the entire system is the last step in the project, where LPS will declare that the whole system has been fully verified and is prepared for real operation. This period will start after the Final Pre-operational Acceptance Protocol has been signed for the entire system and the warranty period will begin.

The Final Pre-operational Acceptance for the entire system will be signed, if:

1) the inventory and a complete physical check of the goods received at all radio sites fulfils the requirements listed in the Technical Specification in all aspects;
2) the technical documentation, appropriate certificates and proofs of conformity have been supplied according to the Technical Specification;
3) training of the LPS staff has been carried out in accordance with the agreed conditions;
4) all Site Acceptance Report problems and observations have been closed;
5) all Pre-operational Verification Report problems and observations have been closed;
6) the Pre-operational Acceptance for all sites and for the Central RCMS system has been satisfactory completed.

TS_11.4_1 The Final Pre-operational Acceptance Protocol for the entire system shall be prepared and issued by the Contractor. The Final Pre-operational Acceptance Protocol for the entire system shall be signed by the LPS's Project Manager.

11.5. *Final Acceptance after warranty period expiration*

The Final Acceptance is the last step in the project, where the Contractor and LPS declare that the system is prepared for operation in the post-warranty period. The post-warranty period and SLA will start after the Final Acceptance Protocol has been signed.

TS_11.5_1 The Final Acceptance Protocol shall be prepared and issued by the Contractor two years after the Final Pre-operational Acceptance Protocol has been signed for the entire system if all errors and observation have been satisfactory solved in the warranty period. The Final Acceptance Protocol shall be signed by the LPS's Project Manager.

12. Abbreviations

Abbreviation	Meaning, description
ACC	Area Control Centre
AC	Alternating Current
BITE	Built-in Test Equipment
COTS	Commercial-Off-The-Shelf
DT	Delivery Time. Defined as the time elapsed between the ordering date of a part by LPS (if it is necessary to order any additional spare parts) and the shipment date of the ordered part from the Contractor to LPS.
DC	Direct Current
EMP	Electromagnetic pulse
FAT	Factory Acceptance Test
LAN	Local Area Network
LPS	Letové Prevádzkové Služby Slovenskej Republiky, štátny podnik
MDF	Main Distribution Frame
MIB	Management Information Base
MRT	Mean Response Time in hours (i.e. the average time from notification of a failure for a technician to be ready to commence any repair action).
MTBF	Mean Time Between Failures. A basic measure of reliability for repairable items. The average time during which all parts of an item perform within their specified limits, during a particular measurement period and under stated conditions.
MTTR	Mean Time To Repair. A basic measure of maintainability. A sum of corrective maintenance times divided by the total number of failures within an item. The average time it takes to fully repair a failed system. Typically includes fault isolation, removal and replacement of a failed item(s) and checkout. It excludes logistics downtime needed for spare part transport from the stock to the site.
OID	Object Identifier
OS	Operational System
SAT	Site Acceptance Test
PC	Personal Computer
RF	Radio Frequency
RCMS	Remote Control and Monitoring System
RX	Receiver
SNMP	Simple Network Management Protocol
TMA	Terminal Control Area
TRX	Transceiver
TWR	Air traffic control tower
TX	Transmitter
UHF	Ultra-High Frequency
VDL	VHF Data Link
VSWR	Voltage standing wave ratio