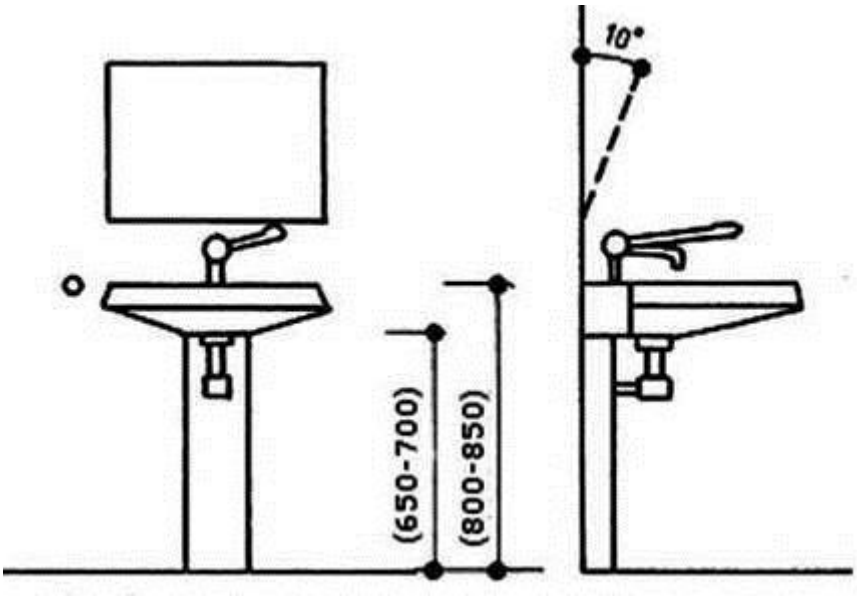
10°
(650-700)
(800-850)